LTRS	REVISIONS		
ORIGINATOR	CHECKER	ENGR APP	MATL APP

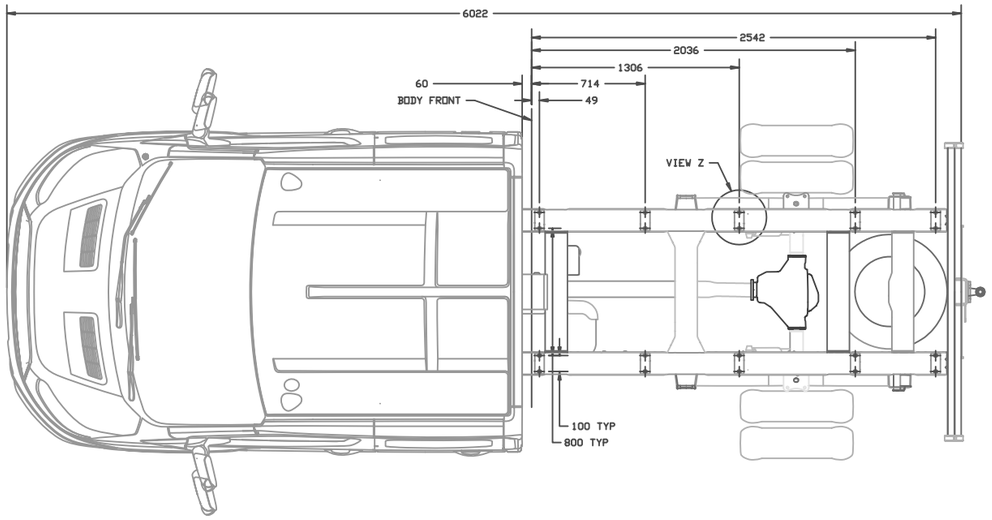

8-EXPLICIT

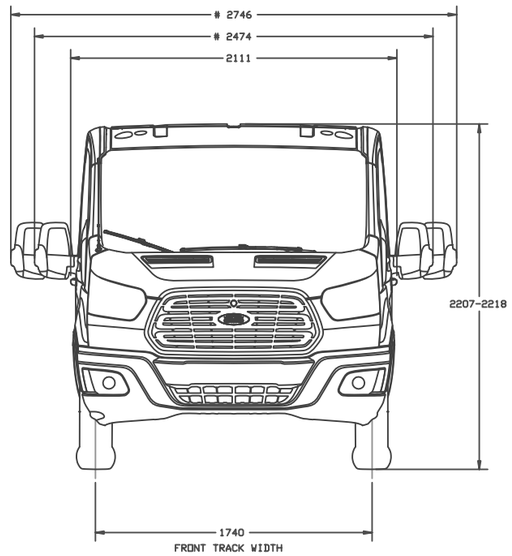

4-EXPLICIT

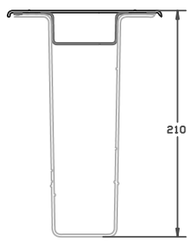

SECT A

TYPICAL OVER LENGTH A
SCALE 1:2

6-EXPLICIT

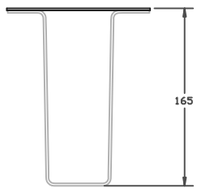

SECT B

TYPICAL OVER LENGTH B
SCALE 1:2

7-EXPLICIT

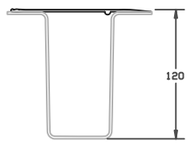

SECT C

TYPICAL OVER LENGTH C
SCALE 1:2

8-EXPLICIT

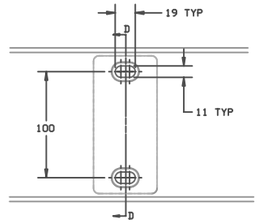

VIEW Z
SCALE 1:2

9-EXPLICIT

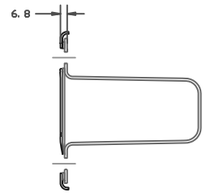

SEC D
SCALE 1:2

10-EXPLICIT

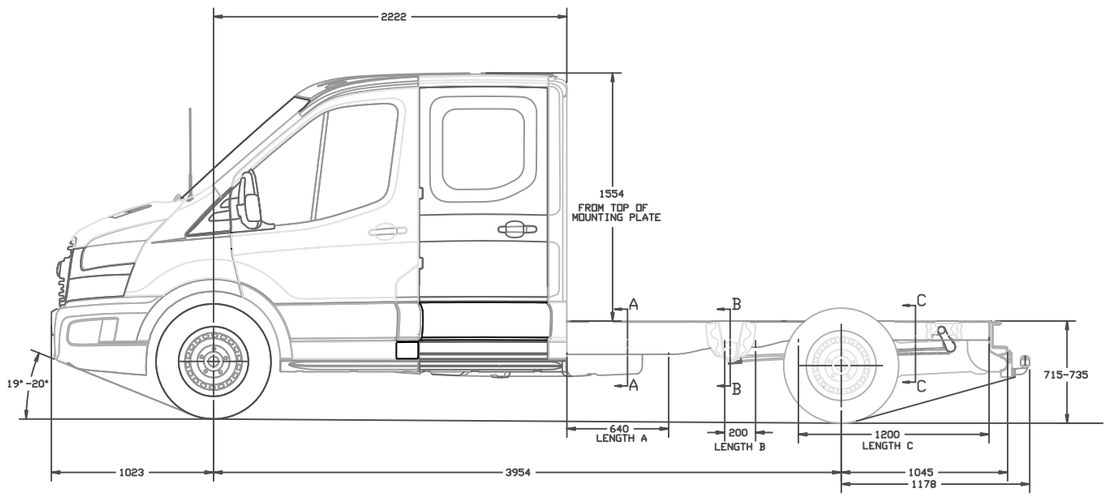

8-EXPLICIT

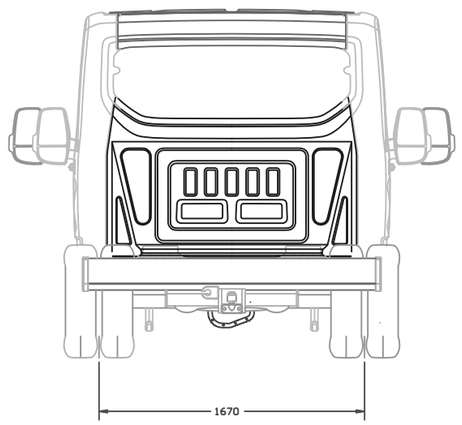

9-EXPLICIT

DO NOT SCALE - DEPENDANT ON GROSS VEHICLE MASS CLASS

REFERENCE

PART MUST COMPLY WITH RESTRICTED SUBSTANCE MANAGEMENT STANDARD WSS-M99P9999-A1 TO SAFEGUARD HEALTH, SAFETY AND THE ENVIRONMENT

DRAFTED IN ACCORDANCE WITH FORD MOTOR COMPANY ENGINEERING CAD AND DRAFTING STANDARDS VERSION_____

3RD ANGLE PROJ
DIMENSIONS ARE IN MILLIMETERS

CAD TYPE	CAD LOC.	CAD FILE	DTMC
I-DEAS	TCE	DC-BK3V-010000-D089;3	IS MASTER
OPER. NO.	UNIT	DRAWING BK3V-010000-D089	
DESIGN GCLAR157	DETAIL GCLAR157	TITLE CHASSIS CAB DOUBLE RWD L3 H1 DRW	SHT 1 OF 1
CHECKED JWULF	SAFETY		RH
SCALE	DATE 121002	DIVISION PLANT	

FORD MOTOR COMPANY

PRINTED COPIES ARE UNCONTROLLED