ESTIMATED WEIGHT (KG)	

ITEM No.	DESCRIPTION / MATERIAL	PART / DRG No.	No. OFF /ASSY

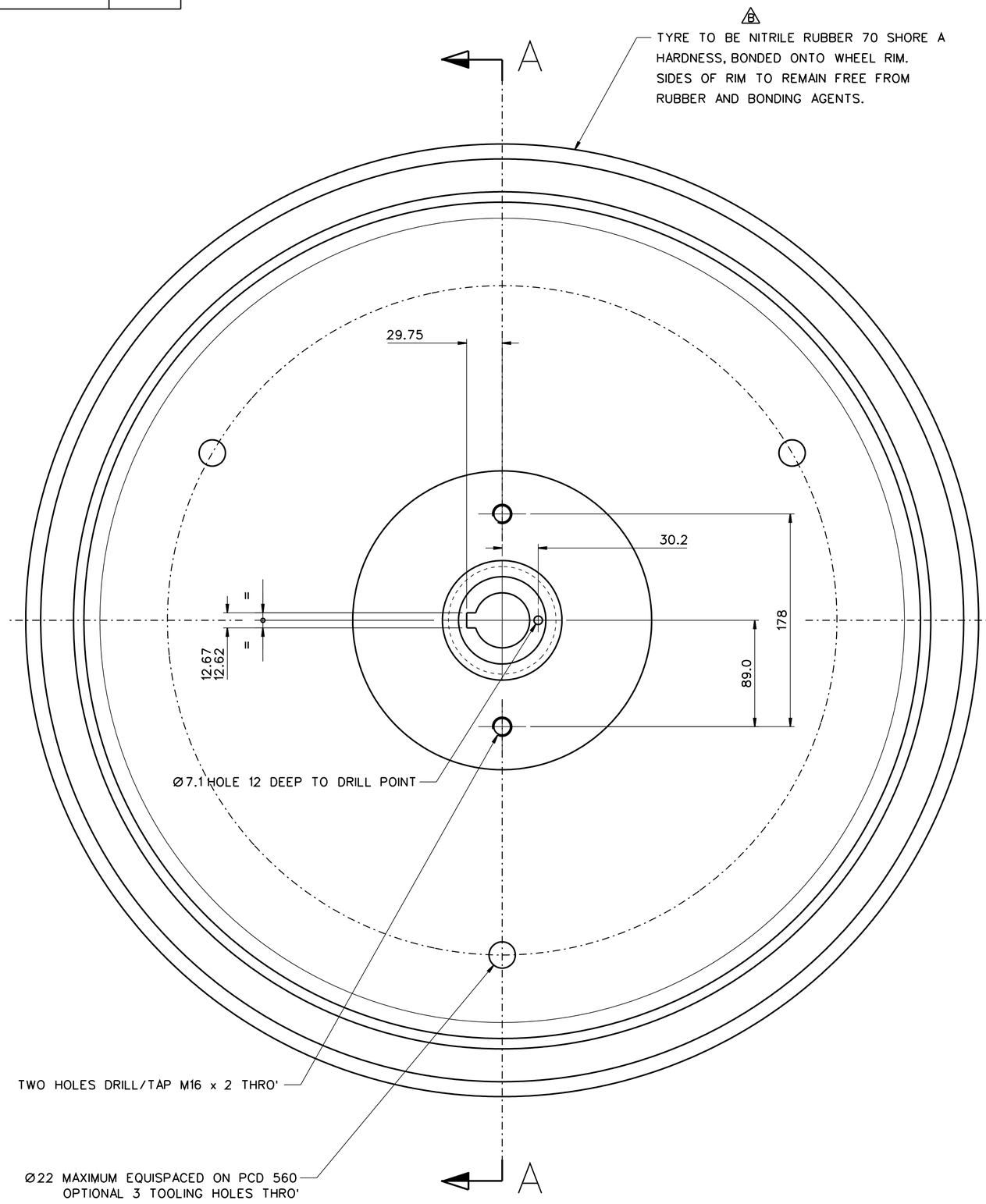

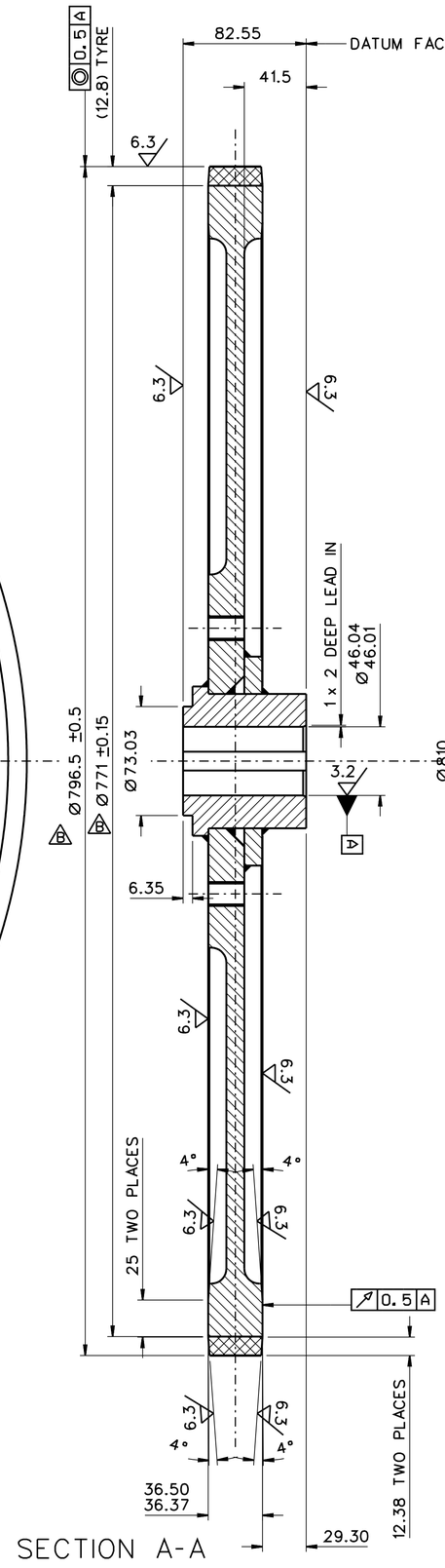

SECTION A-A

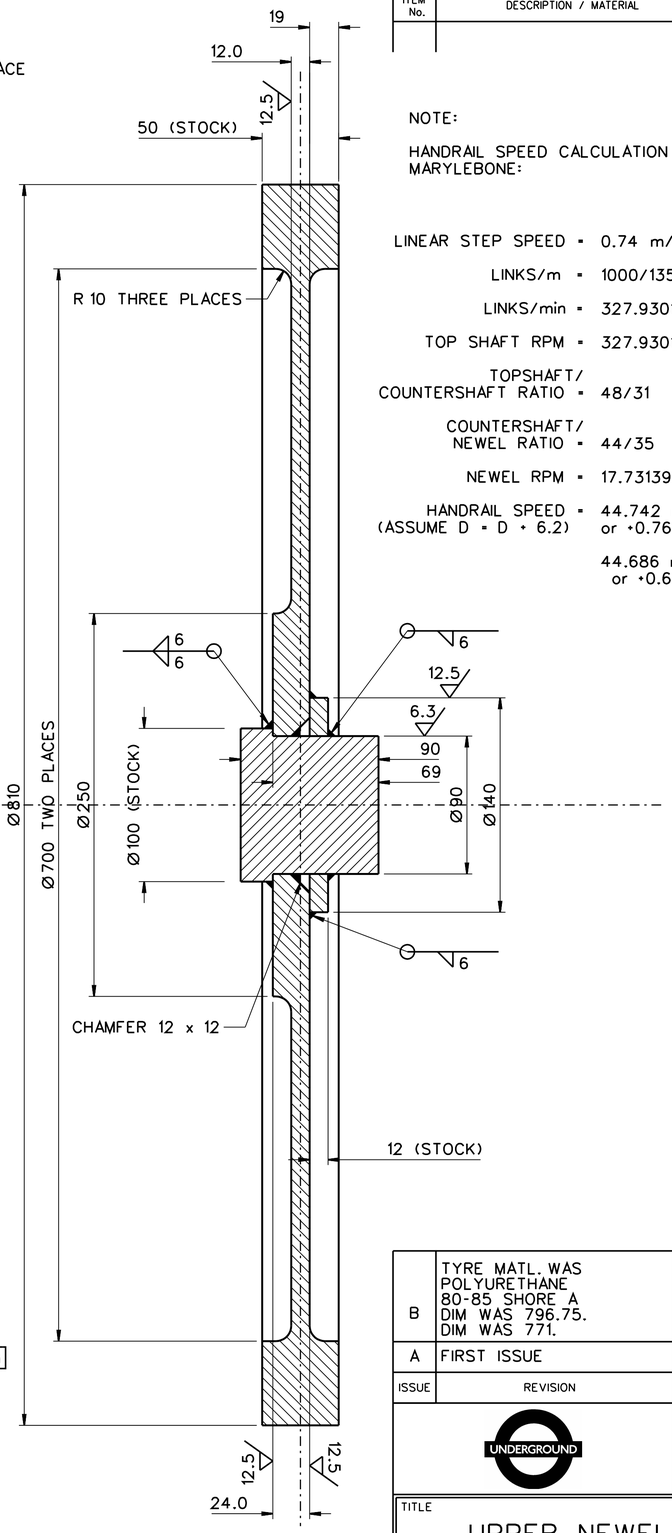

SECTION A-A
PRIOR TO
MACHINING

NOTE:

HANDRAIL SPEED CALCULATION FOR MARYLEBONE:

LINEAR STEP SPEED =	0.74 m/s = 44.4 m/min
LINKS/m =	1000/135.3947 = 7.3858135
LINKS/min =	327.93012
TOP SHAFT RPM =	327.93012/36 = 9.10917
TOPSHAFT/ COUNTERSHAFT RATIO =	48/31
COUNTERSHAFT/ NEWEL RATIO =	44/35
NEWEL RPM =	17.731398
HANDRAIL SPEED (ASSUME D = D + 6.2) =	44.742 m/min or +0.76%
	44.686 m/min or +0.64%

B

ISSUE	REVISION	DCN	BY	AUTH	DATE
B	TYRE MATL. WAS POLYURETHANE 80-85 SHORE A DIM WAS 796.75. DIM WAS 771.	LU/ 338	PC	CAG	5.3.10
A	FIRST ISSUE	BCV/ 099	KLA	RWH	15.9.03

UNDERGROUND

London Underground
Templar House
81-87 High Holborn
London
WC1V 6NU

TITLE

UPPER NEWEL WHEEL FABRICATION

© NEITHER THIS DRAWING NOR ANY OF THE INFORMATION IT CONTAINS MAY BE COPIED OR COMMUNICATED TO THIRD PARTIES WITHOUT WRITTEN PERMISSION

USED ON: MH ESCALATOR

SUPERSEDES: 6262-LP W 17392

SCALE: 1:2

CAD
CHANGE ON CAD ONLY

DRAWING No.: 655-12009

ISSUE: B

FILENAME: 65512009_B

FINISH	MATERIAL	SPECIFICATION & STANDARDS
REMOVE ALL SHARP EDGES & BURRS. RED OXIDE PRIMER & TWO COATS BLACK GLOSS EXCEPT MAJOR DIAMETER, BORE AND THREADS. USE ONLY APPROVED LOW SMOKE FINISHES e.g. COPON EA3 AND EA9.	100 DIAMETER STEEL ROUND BS970: 070M20. 12 THICK AND 50 THICK STEEL PLATE BS EN 10 025: 1990 Grade Fe 430A	

ALL DIMENSIONS IN MM / ~~INCHES~~ UNLESS OTHERWISE STATED

TOLERANCES UNLESS OTHERWISE SPECIFIED

LINEAR METRIC	LINEAR IMPERIAL	ANGULAR: ± 0.5°
0 D.P.: ±1 1 D.P.: ±0.5 2 D.P.: ±0.15	FRACTION: ± 1/64" DECIMAL: ± 0.005"	GEOMETRIC: AS STATED

PROJECTION: FIRST ANGLE / THIRD ANGLE

REFERENCE DRAWINGS	
15-11-035	IDENTIFICATION DIAGRAM FOR HANDRAIL TENSIONER SYSTEM

A1