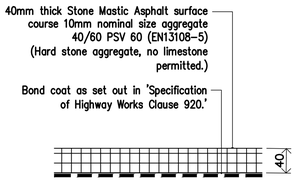

Standard Detail A
Access Road Repairs
Scale: 1:5

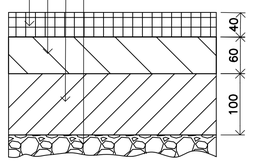

Standard Detail B
Access Road Construction
Scale: 1:5

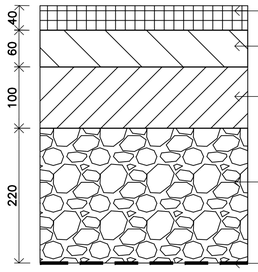

Standard Detail C
Access Road Full Re-construction
Scale: 1:5

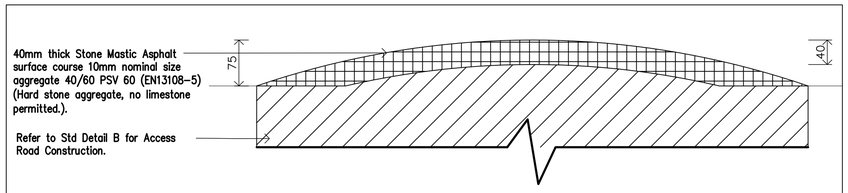

Standard Detail D
Speed Bump
Scale: 1:5

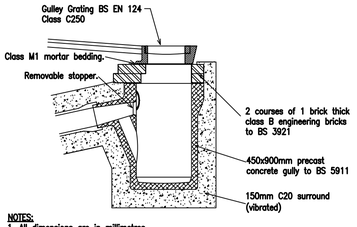

NOTES:
1. All dimensions are in millimetres.
2. Do not scale-work to figured dimensions only.
3. Backfill to working space around gullies to be C7.5 concrete unless there is sufficient room to allow compaction of granular backfill in layers. (subject to approval of the Engineer)
4. Gullies shall comply with the specification set out in 'Devon County Council Highways in Residential and Commercial Estates Design Guide Part 4 – 5.7 Gullies'.

Standard Detail E
Trapped Gully Detail
Scale: N.T.S

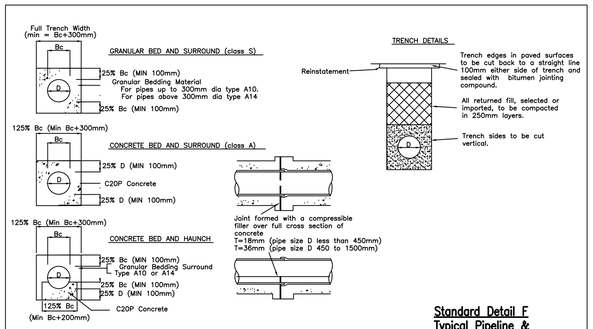

Standard Detail F
Typical Pipeline &
Trench Detail
Scale: N.T.S

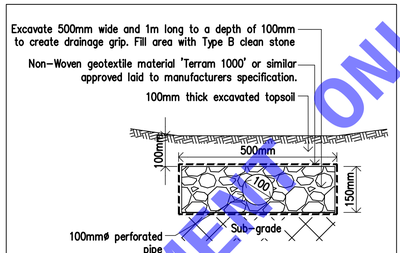

Standard Detail G
Drainage Grip
Scale: 1:10

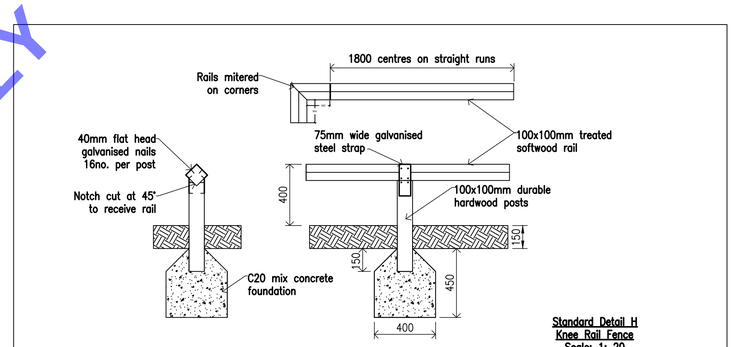

Standard Detail H
Knee Rail Fence
Scale: 1: 20

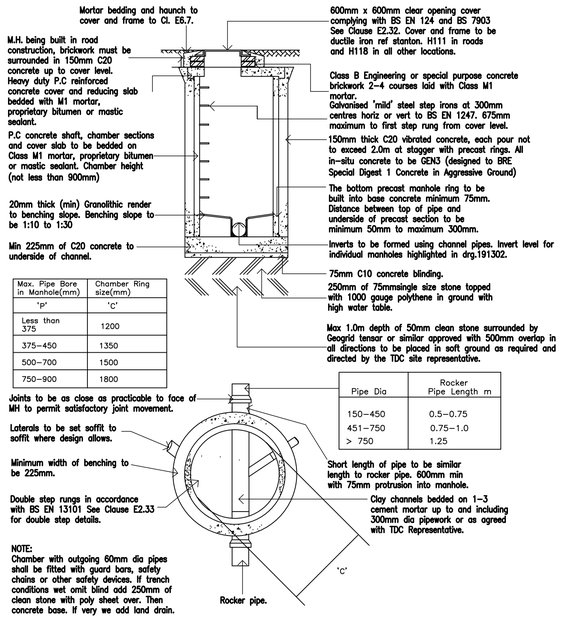

Max. Pipe Bore in Manhole(mm) 'P'	Chamber Ring size(mm) 'C'
Less than 375	1200
375-450	1350
500-700	1500
750-900	1800

Pipe Dia	Rocker Pipe Length m
150-450	0.5-0.75
451-750	0.75-1.0
> 750	1.25

NOTE:
Chamber with outgoing 60mm dia pipes shall be fitted with guard bars, safety chains or other safety devices. If trench conditions wet omit blind add 250mm of clean stone with poly sheet over. Then concrete base. If very we add land drain.

Standard Detail I
P.C. Concrete Manhole Type 2
Maximum depth from cover level to soffit of pipe 3.0m
Scale 1:50

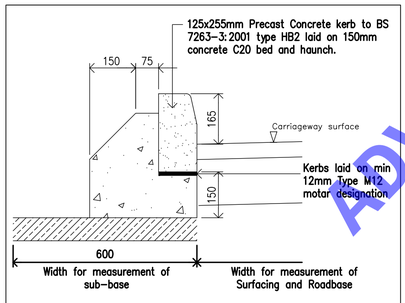

Standard Detail J
HB2 Radius Kerb
Scale: 1: 10

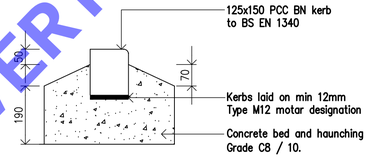

Note:
1. Transition from K1 to K3 kerb types (typical dropped kerb arrangement to be achieved using 1:9 gradient.
2. 6mm upstand at pedestrian crossings and 12mm upstand for vehicle crossings.

Standard Detail K
Dropped Kerb
Scale: 1:10

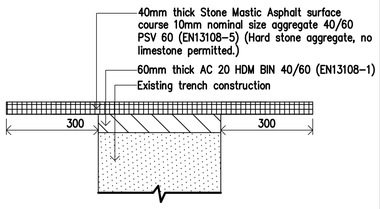

Standard Detail L
Trench Reinstatement Detail
Scale: 1:10

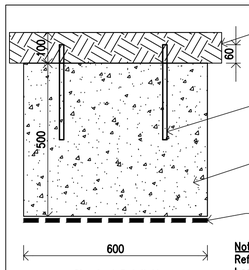

Note:
Refer to Appendix B for concrete base sizing, number of bolts, nuts, spacing's etc.

Standard Detail M
Foundation for Parking Meter
Scale: 1:10

ADVERTISEMENT ONLY

Teignbridge
DISTRICT COUNCIL
South Devon

Economy & Assets
Teignbridge District Council
Forde House
Newton Abbot
TQ12 4XX
Tel:(01626)215828
Fax:(01626)215857

General Notes:
1. Do not scale from this drawing, work to figured dimensions only.
2. The drawing is to be read in conjunction with all other relevant drawings, documents and specifications.
3. The works on site may affect Statutory Undertakers apparatus, and the Contractor is required to verify the location and depth off all such apparatus prior to commencement of work and to take any precautions necessary when working in the vicinity of apparatus.
4. For installation of Wavin AquaCell units, refer to 'Product and Installation Manual'.

All dimensions are in millimetres unless stated otherwise and only figured dimensions are to be worked from. Discrepancies should be reported immediately to the relevant person before proceeding.

Copyright Teignbridge District Council 2006. License No. 100024292 2006.
This drawing may have information reproduced from Ordnance Survey material.
Unauthorised reproduction infringes Copyright and may lead to prosecution or civil proceedings. © Crown copyright material is reproduced with the permission of Land Registry under delegated authority from the Controller of HMSO.
This material may not be copied, distributed, sold or published without the formal permission of Land Registry. Only an official copy of a title plan or register obtained from the Land Registry may be used for legal or other official purposes.

Rev.	Date	By	Eng.	Details

REVISIONS

Scheme Title.
COACH RD, NEWTON ABBOT
ACCESS ROAD WORKS

Drg. Title.
Standard Details

CAD File Ref: G:188403-.dwg

SX No.	Scheme No.	Drg. No.	Rev
8670	1884	03	–

SCALE
As Shown @A1

Drawn by	Approved	Date
J.S		09/19