Mayford Estate

Architect:
Issue Status: D2 – TENDER

Table 1 50 - Drainage....1
Table 2 55 - Water Services....3
Table 4 60 - Heating....5
Table 6 Pipework Insulation....7
Table 7 Pipework Insulation Thickness....9
Table 8 Pipework Protection....10

Table 1 **50 - Drainage**

REF	APPLICATION	TYPE	JOINTING METHOD	DESCRIPTION AND STANDARDS	FINISH	INSULATION TYPE	NOTES/IMAGE
50.1	Above ground soil stack pipework	HDPE	Electrofusion welding to the manufacturers recommendations. Provide expansion fittings complete with ring seal at every floor	HDPE pipework and fittings to BS EN 1519-1 and have an approved BBA Certificate. HDPE pipework to also meet the following standards: • DIN 19535-10 • DIN 19537	As provided by manufacturer.	INSUL 4 where necessary	
50.2	Above ground soil stack pipework	Acoustic – HDPE	Electrofusion, butt welding or push-fit expansion sockets to manufacturer's recommendations	Kitemarked to BS EN 1519	As provided by manufacturer	Generally: INSUL 1 INSUL 4 where necessary	
50.3	Above ground soil waste pipework High temperature waste pipework applications (e.g. safety valve discharges, humidifier blowdown, etc. & Cold Water tank Overflow)	Copper	Solder ring fittings to manufacturer's recommendations.	Copper pipework to BS EN1057, R250 half hard (formally BS 2871 Class X). Capillary soldering or brazing fittings to BS EN1254-1. Lead free solder to BS EN 29453 alloy nos. 28 or 29 or 23.	Uncoated	Do not insulate to encourage heat dissipation	
50.6	Condensate pipework for boilers, AHUs, fan coils etc. Small bore connections on foul drainage.	ABS	Solvent welded to manufacturer's recommendations or use compression fittings.	Kitemarked to BS EN 1455 and have an approved BBA Certificate.	As provided by manufacturer.	n/a	Install a Hygienic Self-Sealing Waste Valve (dry trap) on every waste branch connecting to an SVP.

Pipe Schedule
J6828-MXF-XX-XX-SH-J-41001 Rev P05

© Max Fordham LLP

Mayford Estate

Architect:
Issue Status: D2 – TENDER

REF	APPLICATION	TYPE	JOINTING METHOD	DESCRIPTION AND STANDARDS	FINISH	INSULATION TYPE	NOTES/IMAGE
50.7	Internal rainwater pipework	HDPE	As per pipework type 50.1A	As per pipework type 50.1A	As per pipework type 50.1A	Generally INSUL 1 INSUL 4 where necessary	
50.8	Internal rainwater pipework	Acoustic – HDPE	Electrofusion, butt welding or push-fit expansion sockets to manufacturer's recommendations	Kitemarked to BS EN 1519	As provided by manufacturer	Generally: INSUL 1 INSUL 4 where necessary	

MAX FORDHAM

Pipe Schedule
J6828-MXF-XX-XX-SH-J-41001 Rev P05

© Max Fordham LLP

Max Fordham is a Limited Liability Partnership
Registered in England and Wales
Number OC300026

Registered office:
42-43 Gloucester Crescent,
London NW1 7PE

Mayford Estate

Architect:
Issue Status: D2 – TENDER

Table 2 55 - Water Services

REF	APPLICATION	TYPE	JOINTING METHOD	DESCRIPTION AND STANDARDS	FINISH	INSULATION TYPE	NOTES/IMAGE
55_70.1A	Below ground cold water pipework	MDPE Barrier Pipe	Electro-fusion jointing to manufacturer's recommendations.	Medium Density Polyethylene (MDPE) to BS EN12201. Electro-fusion fittings to BS EN 12201-3. Compression fittings to BS 864 Part 5 or BS EN1254-3. Whole system to be WRAS approved and approved for use in public water supplies. Complies with BS 6920 Water Quality Testing.	Blue pigment – potable	n/a	Use fittings from the same manufacturer suitable for installation in contaminated land. Provide identification tape with trace wire above pipeline where installed in the ground.
55_70.2A	General distribution pipework within risers and residences.	Copper	Solder ring fittings to manufacturer's recommendations.	Copper pipework to BS EN1057, R250 half hard (formally BS 2871 Class X). Capillary soldering or brazing fittings to BS EN1254-1. Lead free solder to BS EN 29453 alloy nos. 28 or 29 or 23. System to be WRAS approved.	As provided by manufacturer	Generally: INSUL 1 Only where space is not available for INSUL 1: INSUL 2	

Pipe Schedule
J6828-MXF-XX-XX-SH-J-41001 Rev P05

© Max Fordham LLP

Mayford Estate

Architect:
Issue Status: D2 – TENDER

REF	APPLICATION	TYPE	JOINTING METHOD	DESCRIPTION AND STANDARDS	FINISH	INSULATION TYPE	NOTES/IMAGE
55_70.2D	Domestic water pipework above ground, rising externally or running along roofs.	Copper with combined insulation and weatherproof cladding system.	Solder ring fittings to manufacturer's recommendations.	Copper pipework to BS EN1057, R250 half hard (formally BS 2871 Class X). Capillary soldering or brazing fittings to BS EN1254-1. Lead free solder to BS EN 29453 alloy nos. 28 or 29 or 23. System to be WRAS approved. Insulation: Refer to insulation type. Cladding: Three layer HDPE/Surlyn/LDPE films bonded onto cold-rolled steel galvanised with Aluzinc.	Label pipework with waterproof labels such that it can be identified readily.	INSUL 1	Install on a raised bracket system. Supports must not perforate the external cladding. Avoid external valves and pipework ancillaries. Where external valves are required ensure glands etc. are rotated to low points to prevent leakage into the cladding. Trace heat to prevent pipe from freezing during cold weather. 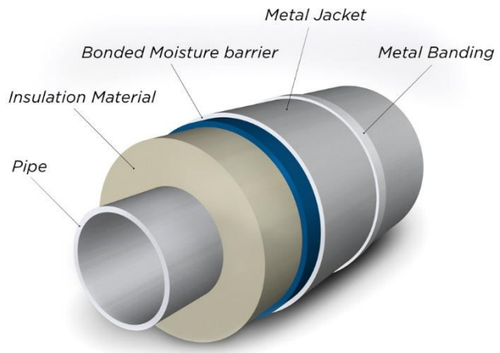

MAX FORDHAM

Pipe Schedule
J6828-MXF-XX-XX-SH-J-41001 Rev P05

© Max Fordham LLP

Max Fordham is a Limited Liability Partnership
Registered in England and Wales
Number OC300026

Registered office:
42-43 Gloucester Crescent,
London NW1 7PE

Mayford Estate

Architect:
Issue Status: D2 – TENDER

Table 3 **60 - Heating**

REF	APPLICATION	TYPE	JOINTING METHOD	DESCRIPTION AND STANDARDS	FINISH	INSULATION TYPE	NOTES/IMAGE
60_40_37.1	Below ground LTHW pipework	Pre-insulated steel pipework	Welded, with waterproof and insulated site joints in heat shrink pipe jacketing to BS EN 489.	Pre-insulated steel pipework system for installation below ground. Carrier pipe: heavy grade carbon steel with longitudinal seam weld. Insulation: Polyurethane foam Casing: HDPE Designed and installed in accordance with BS EN 13941 Proprietary leak detection system. Installed in accordance with CIBSE CP1 Heat Networks Code of practice.	As provided by manufacturer. Label pipework with waterproof labels such that it can be identified readily.	N/A - Pre-insulated	
60_40_37.2	LTHW pipework in plantrooms (65mm dia. and above)	Steel	Welded. Flanged.	Heavy grade carbon steel pipework and fittings to BS EN10255. Carbon steel fittings, butt welded to BS 1965 Part 1, grade as pipes. Welding to class 2. Use welding rods for gas BS 1453 type A2 or A3, or electric arc welding BS 2971. Flanges: provide flat faced hubbed slip-on flanges to BS EN1092-1 for welding with PN to suit system working pressure. Bolting in accordance with BS 4504 Part 3. Jointing rings, use non-metallic flat gaskets to BS EN1092-1.	Red oxide	INSUL 1 INSUL 3	Use flanges where connecting to equipment and valves, etc., or where removable sections of pipework are required.
60_40_37.3	General LTHW pipework in residences and risers.	Copper	Solder ring fittings to manufacturer's recommendations.	Copper pipework to BS EN1057, R250 half hard (formally BS 2871 Class X). Capillary soldering or brazing fittings to BS EN1254-1. Lead free solder to BS EN 29453 alloy nos. 28 or 29 or 23.	As manufacturer.	INSUL 1	

Pipe Schedule
J6828-MXF-XX-XX-SH-J-41001 Rev P05

© Max Fordham LLP
Max Fordham is a Limited Liability Partnership
Registered in England and Wales
Number OC300026
Registered office:
42-43 Gloucester Crescent,
London NW1 7PE

Mayford Estate

Architect:
Issue Status: D2 – TENDER

REF	APPLICATION	TYPE	JOINTING METHOD	DESCRIPTION AND STANDARDS	FINISH	INSULATION TYPE	NOTES/IMAGE
60_40_37.4	LTHW pipework in Level 0 Safestore (originally car parking space)	Steel	Mechanical grooved couplings. Flange to valves and equipment.	Heavy grade carbon steel pipework and fittings to BS EN10255. Flanges: provide flat faced hubbed slip-on flanges to BS EN1092-1 for welding with PN to suit system working pressure. Bolting in accordance with BS 4504 Part 3. Jointing rings, use non-metallic flat gaskets to BS EN1092-1.	Red oxide.	INSUL 1 INSUL 3	Jacketing applied after installation. - Installation-Ready technology couplings to be installed for complete installation without field disassembly. - All grooved couplings, fittings, valves, and specialties shall be the products of a single manufacturer. Grooving tools shall be of the same manufacturer as the grooved components. - Coupling manufacturer's factory trained field representative shall provide on-site training for contractor's field personnel in the proper use of grooving tools, application of groove, and installation of grooved piping products.
60_40_37.5	LTHW pipework above ground, rising externally or running along roofs.	Insulated and clad steel pipework	Welded, with waterproof and insulated site joints in heat shrink pipe jacketing to BS EN 489.	Pre-insulated steel pipework system for installation above ground. Carrier pipe: heavy grade carbon steel with longitudinal seam weld. Insulation: Polyurethane foam Cladding: Three layer HDPE/Surlyn/LDPE films bonded onto cold-rolled steel galvanised with Aluzinc. Designed and installed in accordance with BS EN 13941 Proprietary leak detection system. Installed in accordance with CIBSE CP1 Heat Networks Code of practice.	Label pipework with waterproof labels such that it can be identified readily.	INSUL 1 INSUL 3	Install on a raised bracket system. Supports must not perforate the external cladding. Avoid external valves and pipework ancillaries. Where external valves are required ensure glands etc. are at low points to prevent leakage into the cladding. 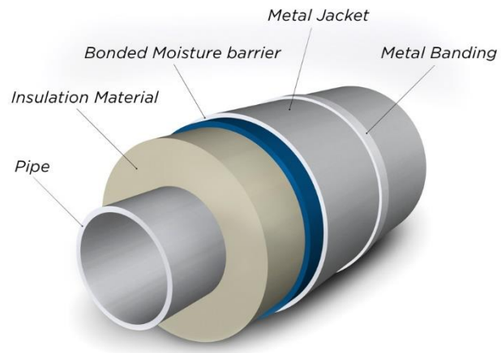

MAX FORDHAM

Pipe Schedule
J6828-MXF-XX-XX-SH-J-41001 Rev P05

© Max Fordham LLP

Max Fordham is a Limited Liability Partnership
Registered in England and Wales
Number OC300026

Registered office:
42-43 Gloucester Crescent,
London NW1 7PE

Mayford Estate

Architect:
Issue Status: D2 – TENDER

Table 4 **Pipework Insulation**

REF	APPLICATION	TYPE	DESCRIPTION AND STANDARDS	VAPOUR BARRIER	PROTECTION TYPE	NOTES
INSUL 1	All insulated pipework	Mineral wool	Foil faced mineral fibre pipe insulation in preformed sections to BS 3958-4. Nominal density - 80 kg/m3 to 120 kg/m3. Thermal conductivity - Not exceeding 0.039 W/mK at a mean temperature of 50oC. Finish - Reinforced aluminium foil with at least 25mm overlap. Minimum reaction to fire class tested to BS EN 13501-1– $A2_L$-s3,d2	Factory applied reinforced aluminium foil vapour barrier jacket with integral self-adhesive lap. Class 0 aluminium factory applied aluminium foil vapour barrier jacket with integral self-adhesive lap. Overlap vapour barrier by at least 25mm. All joints in jacket to be sealed with minimum 75mm wide self-adhesive aluminium foil tape	Generally: none Plantroom: IP-2 External: IP-3 IP-4 where indicated on drawings	On all cold water pipework applications carry insulation through pipeline support in accordance with the specification. Use high density (60kg/m3 or higher) pipe support inserts. Use valve and flange wrapping bags or manufacturer preformed valve covers, not stuffing boxes. Provide insulated intumescent fire sleeves where insulated pipes pass through a fire compartment. To be independently tested to BS 476 and achieve 2hr fire resistance.
INSUL 2	Water pipework only where space is not available for INSUL 1.	Nitrile rubber/ Foamed EPDM rubber	Class 1 closed cell nitrile rubber/foamed EPDM rubber elastomeric performed flexible sections. Nominal density - 90 - 100 kg/m3. Temperature range: -40 to +85oC. Thermal conductivity - Not exceeding 0.04 W/mK at a mean temperature of 20oC. UV Resistant High Temperature Insulation Minimum reaction to fire class tested to BS EN 13501-1– B_L-s3,d0	Ensure that the integrity of the (inherent) vapour barrier is maintained on all cold pipework applications. Use approved adhesive in accordance with the manufacturer's recommendations and instructions.	Generally: none Plantroom: IP-1 IP-2 External: IP3 IP-4 where indicated on drawings	On all cold water pipework applications carry insulation through pipeline support in accordance with the specification. Use high density (60kg/m3 or higher) pipe support inserts. Use valve and flange wrapping bags or manufacturer preformed valve covers, not stuffing boxes. Where refrigerant pipework passes through a fire compartment line, use fire rated insulation (e.g. Armaflex Protect or equivalent) in accordance with the manufacturer's recommendations.
INSUL 3	All insulated pipework with the exception of copper pipework. Not to be used within residences or risers within residences.	Phenolic foam	Foil faced closed cell rigid phenolic foam (PF) preformed sections with passivating bore coating to BS EN13166. Nominal density - 35 - 40 kg/m3 Temperature range: -180 to +120oC Thermal conductivity - Not exceeding 0.021 W/mK at a mean temperature of 10oC. Finish - Reinforced aluminium foil. Minimum reaction to fire class tested to BS EN 13501-1– B_L-s1,d0	Factory applied reinforced aluminium foil vapour barrier jacket. All joints in jacket to be sealed with minimum 50 mm wide self-adhesive aluminium foil tape.	Generally: none Plantroom: IP-1 IP-2 External: IP3 IP-4 where indicated on drawings	On all pipework applications carry insulation through pipeline support in accordance with the specification. Use high density (60kg/m3 or higher) pipe support inserts. Use valve and flange wrapping bags. Do not use valve boxes. DO NOT USE WITH COPPER OR STAINLESS STEEL PIPEWORK Provide insulated intumescent fire sleeves where insulated pipes pass through a fire compartment. To be independently tested to either BS 476 or BS EN 14314 and achieve 2hr fire resistance.

Max Fordham LLP
London Office
T +44 (0)20 7267 5161 maxfordham.com

© Max Fordham LLP
Max Fordham is a Limited Liability Partnership
Registered in England and Wales
Number OC300026
Registered office:
42-43 Gloucester Crescent,
London NW1 7PE

Mayford Estate

Architect:
Issue Status: D2 – TENDER

MAX FORDHAM

REF	APPLICATION	TYPE	DESCRIPTION AND STANDARDS	VAPOUR BARRIER	PROTECTION TYPE	NOTES
INSUL 4	Acoustic insulation	Mineral wool/fibre	Class O foil faced mineral fibre pipe insulation. Temperature range: 0 to +150 oC Nominal density -5kg/m3 to 10kg/m3. Fire resistant. – Class 1 as tested under BS 476 Minimum reaction to fire class tested to BS EN 13501-1– $A2_L$-s3,d2	Class O aluminium foil vapour barrier with at least 25mm overlap. All joints should be taped with self-adhesive aluminium foil tape; secured with aluminium bands at approximately 200 mm maximum centres. To be installed to the manufacturer's recommendations	Generally: none Plantroom: IP-1 IP-2 External: IP3 IP-4 where indicated on drawings	Transmission noise reduction of brands noted for a single layer: Muftilag P 63hz: 5.7; 125hz: 12.5; 250hz: 15.8; 500hz: 19; 1000hz: 21.4; 2000hz: 24.1; 4000hz: 26; 8000hz: 23.8 SuperLag Technowrap 63hz: 2; 125hz: 8; 250hz: 10; 500hz: 20; 1000hz: 28; 2000hz: 32; 4000hz: 31; 8000hz: Rockwool Techtube and Techwrap2 63hz: 1.8; 125hz: 7.9; 250hz: 9.4; 500hz: 20.5; 1000hz: 28; 2000hz: 32.6; 4000hz: 31.7; 8000hz: Transmission noise reduction of brands noted for a double layer: Muftilag P 63hz: 7.3; 125hz: 14; 250hz: 16.8; 500hz: 19; 1000hz: 23.5; 2000hz: 28.1; 4000hz: 33.2; 8000hz: 35.7 SuperLag Technowrap 63hz: 5; 125hz: 9; 250hz: 17; 500hz: 29; 1000hz: 35; 2000hz: 39; 4000hz: 40; 8000hz: Rockwool Techtube and Techwrap2 63hz: 4.8; 125hz: 9.5; 250hz: 16.7; 500hz: 27.7; 1000hz: 35.6; 2000hz: 39.1; 4000hz: 40.2; 8000hz:

Pipe Schedule
J6828-MXF-XX-XX-SH-J-41001 Rev P05

© Max Fordham LLP

Max Fordham is a Limited Liability Partnership
Registered in England and Wales
Number OC300026

Registered office:
42-43 Gloucester Crescent,
London NW1 7PE

Mayford Estate

Architect:
Issue Status: D2 – TENDER

Table 5 **Pipework Insulation Thickness**

RAINWATER – TO PREVENT CONDENSATION					PIPE DIAMETER (mm)															
INSULATION TYPE		MEDIUM TEMP			17	21	27	34	42	48	60	76	89	102	114	140	168	219	245	273
INSUL 1	MINERAL WOOL	0-5°C	INSULATION THICKNESS	(mm)	20	20	20	20	25	25	25	30	30	30	30	30	35	35	35	40
INSUL 2	NITRILE RUBBER				20	20	20	25	25	25	25	30	30	30	30	35	35	35	35	40
INSUL 3	PHENOLIC FOAM				15	15	15	15	15	15	20	20	20	20	20	20	25	25	25	25

COLD WATER – TO PREVENT HEAT GAIN					PIPE DIAMETER (mm)															
INSULATION TYPE		LIQUID TEMP			17	21	27	34	42	48	60	76	89	102	114	140	168	219	245	273
INSUL 1	MINERAL WOOL	≥ 10°C	INSULATION THICKNESS	(mm)	20	20	20	20	20	20	20	25	25	25	25	25	25	25	25	25
INSUL 2	NITRILE RUBBER				20	25	25	25	25	30	30	30	30	30	30	30	30	30	30	30
INSUL 3	PHENOLIC FOAM				15	15	15	20	20	20	20	20	20	25	25	25	25	30	30	30

LTHW / DHW – TO PREVENT HEAT LOSS					PIPE DIAMETER (mm)															
INSULATION TYPE		MEDIUM TEMP			17	21	27	34	42	48	60	76	89	102	114	140	168	219	245	273
INSUL 1	MINERAL WOOL	60-80°C	INSULATION THICKNESS	(mm)	50	50	50	50	50	60	60	60	60	65	65	65	65	70	70	70
INSUL 3	PHENOLIC FOAM				50	50	50	50	50	50	50	50	50	50	50	50	50	50	50	50

MTHW – TO PREVENT HEAT LOSS					PIPE DIAMETER (mm)															
INSULATION TYPE		MEDIUM TEMP			17	21	27	34	42	48	60	76	89	102	114	140	168	219	245	273
INSUL 1	MINERAL WOOL	80-120°C	INSULATION THICKNESS	(mm)	70	70	70	70	70	70	75	80	80	90	90	90	100	100	100	100
INSUL 3	PHENOLIC FOAM				50	50	50	50	50	50	50	50	50	50	50	50	50	50	55	55

Pipe Schedule
J6828-MXF-XX-XX-SH-J-41001 Rev P05

© Max Fordham LLP

Max Fordham is a Limited Liability Partnership
Registered in England and Wales
Number OC300026

Registered office:
42-43 Gloucester Crescent,
London NW1 7PE

Mayford Estate

Architect:
Issue Status: D2 – TENDER

Table 6 **Pipework Protection**

REF	APPLICATION	TYPE	DESCRIPTION AND STANDARDS	NOTES
IP-1	Mechanical protection to internal insulated pipework when accessible or exposed.	Metal cladding	Aluminium sheeting: flat (embossed) or profiled Minimum thickness 0.56mm.	Use pre-formed bends, T-sections, end-caps, valve covers, etc. Install strictly in accordance with the manufacturer's instructions and recommendations.
IP-2	Mechanical protection to internal insulated pipework in concealed risers.	Plastic cladding (Isogenopak)	Rigid PVC, self-extinguishing, anti-static and unplasticised. Minimum thickness 0.35mm Self colour.	Use pre-formed bends, T-sections, end-caps, valve covers, etc. Use manufacturer's adhesive on all seams. Install strictly in accordance with the manufacturer's instructions and recommendations
IP-3	Mechanical protection to external insulated pipework.	Heavy duty multi-ply laminate for interior and external use.	To include a vapour barrier To be suitable for a high range of temperatures (-40°C to 120°C) To be high puncture and tear resistant Tape all joints as required by the manufacturer	Provided with self adhesive material Install strictly in accordance with the manufacturer's instructions and recommendations. Provide Natural Aluminium Stucco Embossed finish
IP-4	Trace heating for pipe work		Maximum withstand temperature 85C For higher temperatures or larger diameter pipes, see other models in the Heat Trace range. Self-regulating heating tape Provide complete with termination/splice kits, end seals, junction boxes and controls as required by the application. All accessories are to be provided from the same manufacturer. IP67 rated	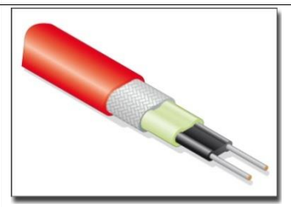

Pipe Schedule
J6828-MXF-XX-XX-SH-J-41001 Rev P05

© Max Fordham LLP

Max Fordham is a Limited Liability Partnership
Registered in England and Wales
Number OC300026

Registered office:
42-43 Gloucester Crescent,
London NW1 7PE

Mayford Estate

Architect:
Issue Status: D2 – TENDER

Notes

1. Contractor to ensure that the catalogue number is consistent with the description prior to order.
2. To be read in conjunction with MFLLP specifications and all relevant drawings.
3. All pipework and ancillaries to be installed in accordance with manufacturer's instructions.
4. All insulated pipework to be insulated with the preferred option described within BS 5970, illustrated in Figure 12 – 'Hanger incorporating load-bearing insulation (for pipes operating above or below ambient temperature). A proprietary rigid insulation pipework support should be used. When pipework is copper or stainless steel an aluminium foil barrier must be installed between the insulation and the pipe to stop the insulation coming into direct contact with the pipe material.

Figure 12 **Preferred option – Hanger incorporating load-bearing insulation (for pipes operating above or below ambient temperature)[A)]**

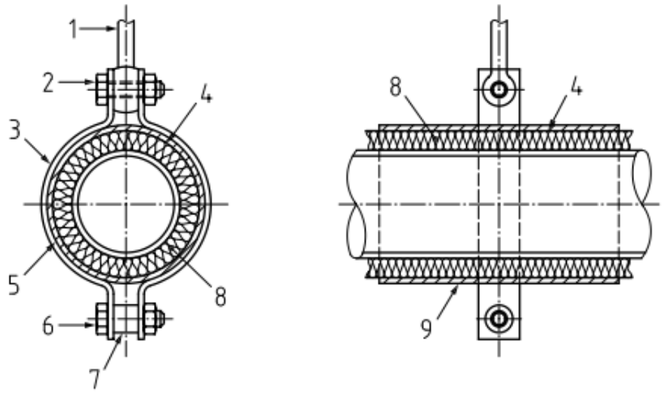

Key

1 Sling rod
2 Load bolt
3 Steel pipe
4 Vapour barrier
5 Steel sheath (split)
6 Clip bolt
7 Distance piece
8 Load-bearing insulation
9 Load-bearing steel sheath

[A)] Wood blocks should not be used.

Rev	Date	Status	Description	Engineer	Project Leader
P05	26/08/22	D2	TENDER	EO	DL
P04	08/07/21	D2	TENDER	EO	DL
P03	07/06/21	S2	For Information	EO	DL
P02	19/04/21	S2	For Information	EO	DL
P01	15/02/21	S2	Draft For Information	EO	DL

MAX FORDHAM

Pipe Schedule
J6828-MXF-XX-XX-SH-J-41001 Rev P05

© Max Fordham LLP
Max Fordham is a Limited Liability Partnership
Registered in England and Wales
Number OC300026
Registered office:
42-43 Gloucester Crescent,
London NW1 7PE