CSL

GradeShift

INSTRUCTION MANUAL

CONNECTED • SECURE • LIVE

CONTENTS

Description	2
Part Numbers	3
Installation Procedure:	
Site Survey	4
Installation - Checklist	5
System Testing	6 - 8
Troubleshooting	9 - 10
Technical Support & Web Site	11
The Details:	
Aerial Siting	12 - 13
DualCom Mounting	13
Security	13
Aerial Connection	14
SIM Card	15
CS5355 - Lan(IP) Card	16 - 17
CS2351 and CS5351 - Expander Boards	18
CS2325 - Plug-on Adapter	19 - 20
Fault & Aux Outputs	28 - 29
Path Faults, Remote Servicing	30
EN50131, PD6662 Connections	30 - 31
Monitoring (Polling)	31
21CN Mode	31
Monitoring (Network Connection)	32
CS2366 - Radio Test Set	32
Telephone Line Connection	33
Analogue PSTN Telephone Line Connection	33 - 35
PABX, ISDN, Home & Business Highway	36 - 38
ADSL or 'Broadband'	39 - 40
System Power Supply & Battery	41
NVM Programming	42
SMS (text) Sending, SMS Remote Control	42
Appendix 1 (A&B buttons, LEDs, Error Codes)	47 - 60
Appendix 2 (Inputs & Self Learning)	61 - 64
Appendix 3 (Plug-on Adapter connections)	65
Appendix 4 (Specification & Regulations)	66 - 67
Appendix 5 (Approvals)	68
Appendix 6 (Glossary of Terms)	69 - 72

Part No.: AH 230010-011 14/12/2011

DualCom GPRS
Installation Manual

Description
DualCom GPRS is an advanced auto-dialling Digital Communication Device for secure alarm reporting. It is supplied as a 'dual path' Alarm Transmission System (ATS) that when fully installed will meet EN50136 standard for ATS 4 & 5 that is suitable for EN50131 Security Grade 1, 2, 3 and 4 installations. In addition, it is suitable for use in systems installed to conform to PD 6662:2010 at Grades 1-4 and for EN50136 environmental classifications 1 and 2.

DualCom GPRS is a low power device that can operate from any voltage between 9 and 30 volts DC. Quiescent current is 30mA or less.

DualCom GPRS can transmit alarm signals to an Alarm Receiving Centre (ARC) via the radio GPRS path, the radio GSM path, the customer's wired LAN network (IP) in connection with the Internet, and the PSTN (Public Switched Telephone Network).

DualCom GPRS is supplied with a SIM Card and programmed NVM and is ready for immediate operation.

When DualCom GPRS is triggered by the alarm system it sends messages to the ARC over any one of its communication paths. Manually triggered test calls are delivered using all paths to test the system fully.

DualCom GPRS monitors its radio, LAN and PSTN communication paths continuously. A fault on one path is reported to the ARC using any one of the other functioning paths. In addition, the Gemini network continuously monitors the polling calls from the DualCom to detect and report total path or equipment failure.

DualCom GPRS includes extensive diagnostic, testing and setup functions that use multiple LED displays that are controlled by push buttons.

DualCom GPRS is housed in a plastic case which protects the electronics and meets PSTN safety requirements.

DualCom GPRS is available for use as a stand-alone unit with screw-terminal inputs and with a Plug-on Adapter for use with Control Panels having the corresponding plug-on connection.

Grade 2 and 3 tamper protected steel boxed power supplies are also available.

Part Numbers

CS 2200	DualCom GPRS G2 (+ SIM Card, NVM) and CS2058 box aerial).
CS 2210	DualCom GPRS G2 (+ SIM Card, NVM) and CS2057 ext. aerial).
CS 2300	As CS2200 but to Grade 3 standard
CS 2310	As CS2210 but to Grade 3 standard
CS 2400	As CS2200 but to Grade 4 standard
CS 2410	As CS2210 but to Grade 4 standard

Optional Extras

CS 2325	Plug-on Adapter (for Control Panels with 'plug-on' comms option)
CS 2351	Plug-on 4 channel expander (12 volt systems only)
CS 5351	Plug-on 4 channel expander (12-30 volt systems)
CS 5355	Plug-on Wired LAN (IP) Card and 4 channel expander.
CS 2057	Hi-gain Aerial with 5m lead (for internal or external use)
CS 2056	Aerial Extention, 5m lead.
CS 2366	GPRS/GSM Radio Test Set
CS 1520	Tamper protected Grade 2 Power Supply.
CS 1530	Tamper protected Grade 3 Power Supply.
CS 0300	Heavy Duty PSTN Lightning/Surge Suppressor
CS 0720	Lo-cost ADSL (Broadband) Filter
CS 0730	Security ADSL (Broadband) Filter

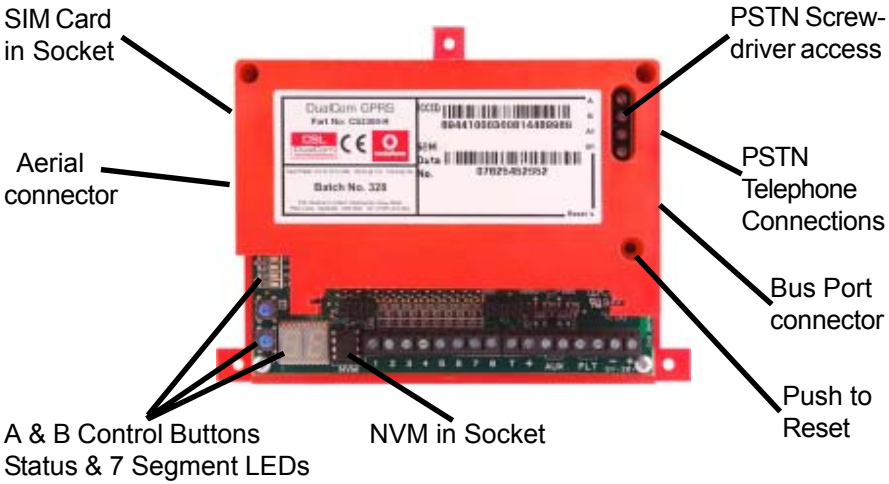

CS2300-R DualCom GPRS
Fig 1

Site Survey

It is strongly recommended that a site survey is conducted prior to installation of a DualCom GPRS to confirm that adequate GPRS signal strength is available at the site.

Before visiting the site, call CSL Technical Support. See page 11. Ask for a GPRS signal strength prediction. For this, you will need to have the Post Code of the site available. This will tell you if there is GPRS radio coverage at the proposed site.

DualCom GPRS may be supplied with a Vodafone UK SIM Card which can only be used in UK on the Vodafone UK GSM network. Alternate SIM Cards may be available. Call CSL Tech Support for details.

If there is no GPRS radio coverage at the proposed site, the DualCom's GPRS radio alarm reporting and polling path will **not** operate. If there is no GSM radio coverage at the proposed site, the DualCom's GPRS and GSM radio alarm reporting and polling paths will **not** operate.

Use of the CS2366 GSM/GPRS Radio Test Set is recommended to survey the proposed site for GSM/GPRS signal strength and to locate the point of strongest signal. See Aerial Siting on Page 12 for more information. Make a note of this point and use it when installing the DualCom aerial.

DualCom recommends that a minimum of 2 base stations are available with 40% or greater signal strength on one and at lease 30% on the other.

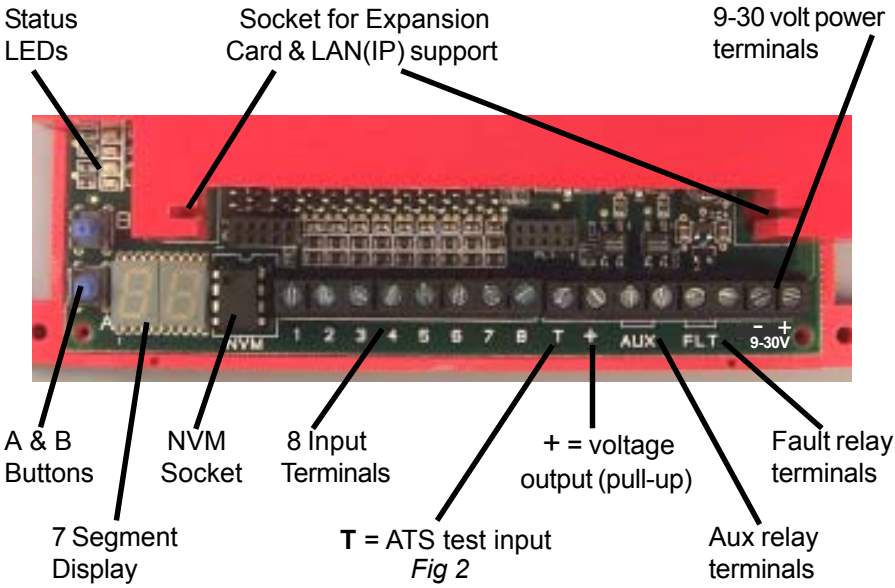

Fig 2

Installation

1. Site the aerial at the point of strongest signal ensuring that it is within the protected area. This is usually the highest point in the building and well away from metal roofs and metal walls. See Page 12.

   The DualCom may be ordered with the CS2058 Box aerial for internal use only or the CS2057 External aerial. Each aerial may be ordered separately.

2. Totally power down the Control Panel, both mains and battery.

3. Where required, fit the CS2325 Plug-on Adapter. See page 19 & 20.

4. Where required, fit the CS2351 or CS5351 Four Channel Expansion Board. Alternatively, fit the CS5355 Wired LAN Card. This provides LAN connection and includes the facilities of the Four Channel Expansion Boards.
   Connect the LAN Card to the LAN using a Cat 5 cable. See page 16 & 17.
   Connect the inputs as required. See page 18 and Appendix 2.

   Note: An Expansion Board and a LAN(IP) Card **can not both** be fitted at the same time.

5. Connect the input triggers to the DualCom. See Fig 2 and Appendix 2.
   (This step is not required when the CS2325 Plug-on Adapter is used)

6. Connect to the output relays “Fault” and “Aux” as required. When installing to EN50131, PD6662 standards, ensure that fault reporting from the DualCom to the Control Panel is configured as required. See pages 28 to 30.

7. Connect the aerial to the DualCom. See page 14.

8. Connect the PSTN line to the A & B terminals. Screwdriver holes are provided. See Fig 1. For security installations, only use ‘serial connection’ for other equipment that is using the same telephone line. See Pages 33 to 40.

9. Connect the ‘9-30v ’ terminals to the Control Panel or Power Supply output (often called ‘Aux supply’ or ‘DC power’). See Fig 2 and page 41.
   (This step is not required when the CS2325 Plug-on Expander is used)

   Note 1: The **CS2325 Plug-on Adapter** and **CS2351 Four Channel Expansion Board** are for use with **Intruder Alarm systems only**. The supply voltage **must not exceede +15 volts.**

   Note 2: The ‘+’ terminal (next to the Aux terminals) is a voltage **output.** This terminal is **not** the supply connector. See Appendix 2.

10. Reconnect the mains supply to the control panel. The DualCom is now ready for testing.

System Testing

Ensure you have informed your Alarm Receiving Centre that you are ready to test your DualCom.

1. When the Control Panel is powered-up, the DualCom will initialise. This will take about 1 minute. LED indications are listed in Appendix 1.

   The Red PSTN and Yellow GSM path LEDs will flash alternately when:
   - The NVM is an incorrect type or is faulty or is fitted incorrectly.
   - The NVM has been incorrectly programmed.
   - The NVM is blank or un-programmed.

   See Appendix 1. Contact CSL Technical Support for further advice.

   Path problems are indicated by the Yellow GSM path LED, the Red PSTN path LED & the Green LAN path LED. See Appendix 1, Table15, 18 & 21.

2. Use the A & B Buttons to enable the Wired LAN Card where this has been fitted. See Appendix 1, Table 31.

   Use the A & B Buttons to disable the Telephone Line where this has not been fitted. See Appendix 1, Table 31.

   Use the A & B Buttons to select a telephone pre-digit '9' when the DualCom is connected to an extention of a PABX. See Appendix 1, Table 31.

3. To test **all** communication paths to the ARC, use the A & B Buttons to start the test calls. This will cause DualCom to send a test signal to the ARC on **all** active paths, e.g. GPRS (radio), GSM (radio), Wired LAN (internet/IP) and the PSTN telephone path. See Appendix 1, Table 30.

   Note: To provide the highest possible availability on the radio path, a GPRS call and a GSM call will be made. For a DualCom with radio and a PSTN telephone path then 3 test calls should be received at the ARC every time the test calls are started.

   During communication the Radio & Wired path LEDs will flash and the display will show 'C1, C2, C3' and 'A' to indicate the progress of the call, see Appendix 1, table 14,17 & 20. When a path has successfully communicated with the ARC, its associated LED will go off. Contact the ARC to ensure that **all paths** have successfully sent Test calls and that the ARC operator can see them on their screen.

   Ensure after the test that all Path LEDs are off; this will mean that the Test calls on all paths are complete.

System Testing (continued)

4. From the Control Panel's keypad, trigger calls for all used channels, e.g. Intruder, Open/close, P/A and Fire circuits.

   Note: When **alarm calls** are made (i.e. not Test calls), **all** DualCom paths are activated, but only **one alarm call** will be received. This will be via the path that is the first to send the alarm call to the ARC.

Mode of Communication	Path
1st, GPRS	Radio
2nd, GSM	Radio
3rd, LAN - Wired (where fitted)	LAN (IP)
4th, Analogue - Wired	PSTN

Table 1

5. For quicker testing of telephone line failure detection and radio path failure detection, use the A & B Buttons to select 'Test tE' mode. Detection of PSTN failures and radio path failures will now be much quicker than for normal operation. See Appendix 1, Table 30.

   Simulate a PSTN path failure. Remove the PSTN wires from the A & B terminals and wait until the fault is actioned by the DualCom (typically 10 seconds). Observe the PSTN fail message being sent via the radio path. Replace the PSTN wires in the A & B terminals. Then observe the restore message being sent via the radio path.

   Simulate a Radio path failure. Disconnect the aerial lead from the DualCom and wait until the fault is actioned by the DualCom (typically 50 seconds). Observe the radio fail message being sent via the PSTN path. Replace the aerial lead in the aerial connector on the DualCom. Then observe the restore message being sent via the radio path.

   'Test tE' mode will be automatically disabled after 10 minutes. Detection of PSTN failures and radio path failures will return to their preset speed.

6. Contact your ARC to confirm that all signals have been received. Ensure that all 'Restore' signals are received when the DualCom input terminals return to their quiescent value.

System Testing (continued)

7. If the quiescent (non-active) states of the input terminals are incorrect, i.e. ‘positive applied/removed is inverted, then the ARC will report that the Alarm/ Restore or Open/Close is the ‘wrong way round’.

   To correct this, use the A & B buttons to start the Input Learning feature. See Appendix 1, Tables 30 & 31. Input Learning is also fully described in Appendix 2.

8. If you are using the Alarm Abort feature, set the Alarm Panel, initiate an alarm condition (If the alarm system incorporates bell delay this will be overridden) and then unset the alarm system within 90 seconds.

   Check that the alarm abort signal has been received by the ARC and also that the preceding alarm event has been aborted.

9. To meet EN 50131 Grade 2 and 3 standards, DualCom GPRS is supplied with monitoring (polling) enabled on the Radio path (and where fitted, the LAN path). See Monitoring on page 31 for more information.

   Polling will start automatically 45 minutes after power-up.

10. **Note the SIM Card number Serial Number (8944 1000 xxxx xxxx xxxx), the NVM ‘chip’ number and any security access numbers on the site records that will be stored at your office.**

11. When not communicating or indicating errors, the DualCom’s display will show the received radio signal strength as a percentage. E.g. ‘47’ = 47%.

    Reliable operation is unlikely with a low signal strength (below 40%). If the display shows that the signal strength is low, you should improve the signal strength. See Aerial Siting on page 12 & 13.

12. Your DualCom is now fully tested.

DualCom GPRS is a dual path signalling device.
Where the product is not fully installed to the
appropriate dual path specification then
the product may not operate as designed.

Troubleshooting

Q. What if there appears to be random triggering of the DualCom ?

Ensure that 0 volts is common across all parts of the alarm system.

If the DualCom receives its power from a Power Supply that is additional to the alarm system, ensure that the 0 volt connection on the additional power supply is connected to the 0 volt connection on the alarm system.

Q. What if the Telephone path signal is not received by the Alarm Receiving Centre ?

Use the A & B Buttons to check that the PSTN path is active. See Appendix 1, Table 31.

Check that the PSTN line is properly connected. Check with a meter that approximately 50 volts DC is present across the PSTN terminals marked A and B (25-33v if connected to a PABX). Connect a telephone to the PSTN line and make a call to ensure that it is fully functional. (Note the screw-driver access holes to avoid removing the DualCom's lid). Remove telephone after test.

Disconnect any other equipment that is using the same PSTN line to ensure that it is not inhibiting the DualCom.

Where ADSL (Broadband) digital signals are on the telephone line ensure that an ADSL (Broadband) filter is fitted between the DualCom's telephone terminals and the PSTN line. See page 39 & 40.

Check that when the DualCom's PSTN path is triggered, the voltage across the telephone line A and B terminals drops to between 6 and 12 volts DC.

Ensure that 'call barring' to the ARC Receiver telephone number has not been set on the PSTN line used by DualCom. Test using a telephone to call the ARC receiver number.

See Appendix 1, Table 18 for Line Monitoring indications. These will help diagnose line problems.

Q. What if the Radio path signal has not been received by the Alarm Receiving Centre ?

Check, using the 7 segment display that the radio signal is sufficient (FSSI = 40 or greater) and that the GSM path status = OK.

Check with a meter that the voltage supply to the DualCom is correct and does not dip when the DualCom is signalling.

See Appendix 1, Table 15 for fault indications. These will help diagnose radio path problems.

DualCom GPRS is supplied with a Vodafone UK GPRS SIM Card and can only be used in UK on the Vodafone UK GPRS network.

Check that the SIM Card is inserted in its carrier correctly. See Fig 1.

Q. What if the Wired LAN (IP) signal has not been received by the Alarm Receiving Centre ?

Check, using the LEDs that no LAN path faults exist. See Appendix 1, Table 21 for fault indications. These will help diagnose LAN path problems.

Check that the LAN has a route to the Internet. Ensure that Firewalls, Routers etc will allow external access. Refer to IT staff on site.

Check that the LAN has a DHCP Server function. The LAN card requires this when first connected to the LAN. Refer to IT staff on site.

Check with a meter that the voltage supply to the DualCom is correct and does not dip when the DualCom is signalling.

Technical Support & Web Site

If you have installed the DualCom in accordance with these instructions, checked all the above points but are still experiencing problems you can contact your DualCom supplier.

In UK, DualCom installation, programming, operation or other questions may be addressed to:

The CSL Technical Support Desk:
Tel: +44(0) 1895 474 444
Fax: +44(0) 1895 474 440
Email: support@csldual.com
Hours: 08.00 to 18.00 weekdays
09.00 to 16.00 Saturday

The CSL web site: *http://www.csldual.com* contains the latest copies of all manuals for all CSL products. Please ensure that you are working from the latest version. You can also download associated information and software samplers. Sales, shipping and contact information is here too.

For Vodafone GSM/GPRS radio signal strength predictions in UK using the postcode of the proposed installation site, use the CSL web site link: *http://www.csldual.com/coverage* Select Map Type = Mobile Data Map, and Mobile Data Coverage = Standard Services.

Aerial Siting

ALWAYS do a site survey to find an area of strong signal **before** installation. Installing a DualCom with a weak signal is bad installation practice. The DualCom is likely to suffer signal failure causing wasted site vists, wasted time & money.

The aerial should be mounted **vertically** at the point of strongest signal. This is usually the highest point in the building (often the loft area).

Large metal structures can affect radio signals. Avoid installing the aerial directly under metal roofs or within metal skinned buildings because this **will reduce the signal strength and may inhibit operation completely.** If this is unavoidable, the strongest signal will be found away from the metal roof or close to large external windows or skylights.

Avoid installing the aerial close (2 metres) to cable runs, ducting, structural metalwork, metal pipes, water tanks and electronic equipment, e.g. photocopiers, fax machines etc. These can have similar effects to metal roofs.

Reliable operation is unlikely with a low signal strength. If the display shows that the signal strength is low, you should improve the signal strength. This may be achieved by repositioning the aerial. The GPRS aerial lead should **not be cut,** therefore repositioning the aerial may require that the DualCom is also repositioned. The CS2056 Aerial Extention is available to aid repositioning.

DualCom recommends that a minimum of 2 base stations are available with 40% or greater signal strength on one and at lease 30% on the other.

The CS2366 Radio Test Set is ideal for surveying a site. This handheld unit can check the availability, signal strength and interference status of all surrounding Base Stations. In addition, it will identify the best location for a DualCom GPRS aerial within the building, help to avoid sources of interference and can confirm the availability of a GPRS service at the proposed site. See page 32.

Where a Nokia 'Net Mon' phone is available and a Vodafone SIM Card is fitted, it may be used in the same manner as the CS2366 Radio Test Set.

Where a CS2366 Radio Test Set is unavailable, a DualCom GPRS, aerial and fully charged battery may be used to locate the point of strongest signal. Ensure that the DualCom is fully operational then walk around the site carrying the equipment and observing the signal strength display on the DualCom.

This 'DualCom, aerial & battery' method **can not** provide information on the availability, signal strength and interference status of all radio Base Stations in the surrounding area. Use of the CS2366 Radio Test Set is recommended.

Aerial Siting (continued)

Alternatively, a Vodafone mobile phone may be used to locate the point of strongest signal. The signal strength indicator is normally a bar or line at the side of the display on the mobile telephone. **Note: The mobile phone MUST use the Vodafone network.** A mobile phone that uses a different radio network will NOT show the correct signal strength.

This 'mobile phone' method **can not** provide information on the availability, signal strength and interference status of all radio Base Stations in the surrounding area. Use of the CS2366 Radio Test Set is recommended.

When you have identified the point of the strongest signal, make a note of this point and use it when installing the DualCom aerial.

An optional extra CS2056 Aerial Extention lead is available. This is 5 metres long. When used, it will **reduce** the signal by approx **10%**. Therefore, the aerial **must** be positioned to **improve** the signal strength by **at least 10%** in order to provide any benefit.

Remember: It is **always** easier to find the point of strongest signal **before** the equipment is fitted to a wall. Moving aerials, cables, trunking etc. after installation is wasted time and effort.

DualCom Mounting

DualCom may be mounted in a boxed power supply or other suitable case. The CS1520 and CS1530, grade 2 and 3 power supplies are ideal for this. The case has mountings and screw retainers for a DualCom, space for 7 amp/hour battery(s) and plenty of room for wiring.

Security

DualCom should be protected from physical assault and tampering by being fitted inside a tamper protected enclosure forming part of the alarm system, e.g. the Control Panel. The CS1520 or CS1530 Power Supplies are also ideal for this.

No installation or user programming of the NVM is necessary.

See Appendix 1, Tables 30, 31 & 32 for setup options using the A & B buttons.

Contact CSL Technical Support with any programming or other queries. See page 11.

Aerial Connection

The CS2057 aerial is available with a 5 metre lead. This item is weatherproof and may be mounted internally or externally where installation standards allow. Do not cut, rejoin or lengthen the lead.

CS2057 Install the aerial vertically.

Fig 3

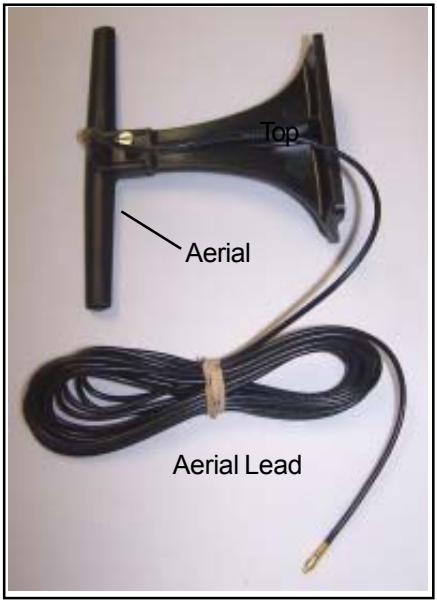

If the signal strength is insufficient, relocate the aerial and (if necessary) also relocate the DualCom, extending the bus wiring and other leads as required.

An optional CS2056 Aerial Extention lead is available. This is 5 metres long. When used, it will **reduce** the signal by approx **10%**. Therefore, the aerial **must** be positioned to **improve** the signal strength by **at least 10%** in order to provide any benefit.

Plug the aerial lead connector into the DualCom

Fig 4

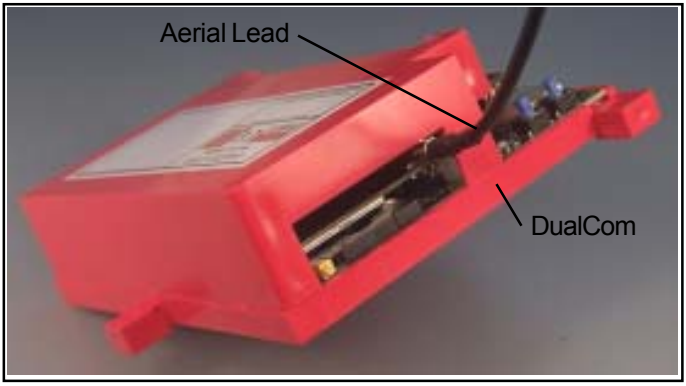

SIM Card

The DualCom GPRS is supplied with a Vodafone SIM Card already fitted. The supplied SIM card is programmed for DualCom GPRS only. SIM Cards from other suppliers may be available through CSL. Call Tech Support for details.

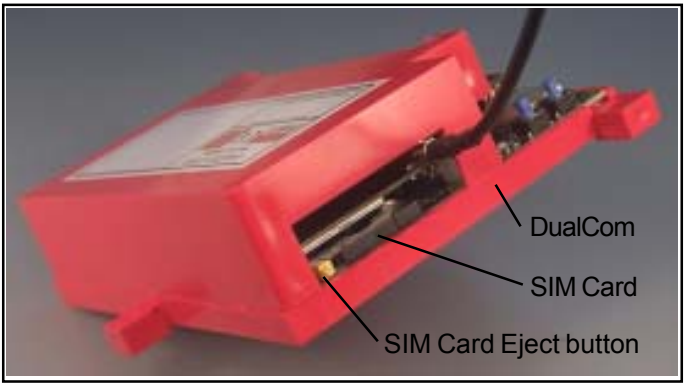

Fig 5

Remove the SIM Card

1. To eject the SIM Card, press the yellow Eject button.

   The SIM Card in its black carrier will be ejected 2-3mm so that it may be pulled out using fingers.

Replace the SIM Card

1. When refitting, ensure that the SIM Card is properly seated in the black carrier.

2. Slide the carrier into the DualCom with the SIM Card gold connectors towards the DualCom's green circuit board.

The CS5355 Wired LAN(IP) Card

The Wired LAN(IP) Card allows the DualCom GPRS to be connected to a LAN. This typically will be a LAN for office computers where cabling is Cat 5 UTP cable, and connectors are RJ45 type.

In addition, the Wired LAN(IP) Card includes all of the features of the CS2351 Expander Board. See page 18.

Fig 6

The LAN to which the Wired LAN(IP) Card is connected **must**:

1. **have** a route to the internet (the 'default gateway'). This typically will be by ADSL (broadband) communications. Without this, the Wired LAN Card **will not** operate.

2. **have** either,
   a). a DHCP server function so that the LAN(IP) Card will automatically be given an IP address on the LAN, or...
   b). the LAN(IP) Card must be programmed with a Fixed/Static IP address.

   CSL will dispatch a DualCom and LAN(IP) Card fully programmed for operation providing that the 'default gateway', IP address options and mask information are provided with the order.

   As with all DualCom setup details, this IP information can also be downloaded to the DualCom and changed if required. Where IP addressing requires setting/ changing, please ensure that you are fully conversant with IP, Internet and LAN conventions then contact CSL Technical Support.

The CS5355 Wired LAN(IP) Card (continued)

To install:

1. Follow steps 1, 2 and 3 on the next page.

2. Using a Cat5 lead fitted with RJ45 connectors, connect the metal boxed socket on the Wired LAN Card to a LAN connection point. See Fig 6.

3. Re-connect the power supply. The CS5355 Wired LAN Card may be used with alarm systems power supplies between 12 and 30 volts.

4. Using the A & B buttons, enable the Wired LAN Card. See Appendix 1, Tables 30 & 31.

Operation:
On the metal boxed socket, where the LAN cable connects are Yellow and Green LEDs. When properly connected:

a). the Yellow LED will be on solidly indicating that the LAN cable has a connection at its other end.

b). the Green LED will blink on once every 1-2 seconds indicating data to/ from the LAN(IP) Card.

Where communication errors are present these will be shown as ‘E’ numbers on the DualCom’s display. See table 36, E41 to E49 in Appendix 1.

LAN communication status and call progress is shown on the Green LAN LED. See table 20 and 21 in Appendix 1.

Note:
The CS5355 LAN(IP) Card may be used with alarm systems where the power supply is between 12 and 30 volts.

The older CS2355 LAN(IP) Card must not be used with supply voltages above 15 volts.

The CS2351 and CS5351 Expander Boards

The CS2351 and CS5351are plug-on Expander Boards that provide an additional 4 inputs to the DualCom. These will trigger channels 9, 10, 11 and 12.

Note that the DualCom GPRS uses channels 13, 14, 15 and 16 to report path and polling faults to the ARC, thus **only 4 extra inputs** (9 to 12) can be used on security installations.

The CS2351 is for use with 12 volt alarm systems only.

The CS5351 may be used with alarm systems supplied up to 30 volts.

Installation

1. Remove power to the DualCom when fitting or removing the Wired LAN Card or the Expander Board.

2. Slide the Expander Card into the two slots on the DualCom top cover with the screw terminals facing towards the DualCom's terminals. Push the Expander Card down to ensure it connects fully to the DualCom. See Fig 6.

Fig 7

3. Connect the triggering inputs to the input terminals labelled 9 to 12, as required. See Appendix 2.

   All of the normal options apply to the inputs on the Expander Board. These are: Positive applied / removed triggering and Self Learning.

4. Re-connect the power supply.

Note 1:

The **CS2351 Expansion Board** is for use with **Intruder Alarm systems only**. The supply voltage **must not exceede +15 volts.**

The CS5351 Expander Board may be used on systems with power supply voltages between 12 and 30 volts.

Note 2:

A Wired LAN(IP) Card and an Expander Board **can not both be fitted,** only one or the other.

The CS2325 Plug-on Adapter

The CS2325 Plug-on Adapter provides a connection between the CS2300-R DualCom GPRS and Control Panels that have a facility for plug-on comms.

Power to the DualCom, connections to the DualCom's 8 input channels, the DualCom's ATS Test input and the Fault output are all made via the plug-on pins. See Fig 8 and appendix 3.

When the CS2325 Plug-on Adapter is used, the Control Panel **must** supply +5 volts and +12 volts from its plug-on pins.

Note 1: The **CS2325 Plug-on Adapter** is for use with **Intruder Alarm systems only**. The supply voltage **must not exceede +15 volts.**

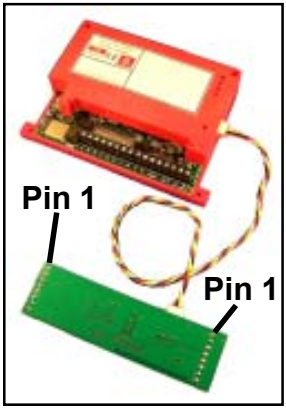

Fig 8

Installation

1. Connect the Plug-on Adapter to the DualCom and the Control Panel. Refer to the Plug-on Adapter leaflet.

   Ensure that the Plug-on Adapter is connected to the Control Panel the **correct-way-round**. See the markings for 'Pin1' on the connectors and Fig 8.

2. **Do not** connect any power or supply voltage to the DualCom's '9-30 volt' Screw Terminals.

Mounting

Refer to the Plug-on Adapter leaflet.

The CS2325 Plug-on Adapter (continued)

Operation

1. When first powered, the DualCom will detect the Plug-on Adapter and thereafter will always remember that it must be connected. The Operation LED on the Plug-on Adapter will flash continuously when connection to the DualCom is established.

2. When the Plug-on Adapter is connected then the 8 input terminals on the DualCom are inactive. All inputs are provided by the plug-on pins.

3. Power for the DualCom and the Plug-on Adapter is provided by the Control Panel via the plug-on pins.

4. Where 'PD6662, BSIA 175' fault operation is required between the DualCom and the Control Panel, select this using the A&B buttons. Refer to Fault & Aux Outputs on page 28 - 30 and Appendix 1, Tables 30, 31 and 32.

5. Where other fault operation is required between the DualCom and the Control Panel, make connections from the DualCom's Fault and Aux relay outputs to suitable Control Panel inputs. Select the required operation using the A&B buttons. Refer to the Fault & Aux Outputs on pages 28 - 30 and Appendix 1, Tables 30, 31 and 32.

Returning DualCom to the 'Stand-Alone' mode

Where a DualCom has been used with a Plug-on Adapter and the DualCom is now required in the 'stand-alone' mode (i.e. the Plug-on Adapter is no longer required) then the DualCom's Plug-on Adapter memory must be reset.

To reset the memory,

a). Unplug the Plug-on Adapter from the Control Panel and from the DualCom.

b). Where fitted, unplug the CS2351 or CS2355 Expander Card.

c). Press and hold the A button.

d). With the A button still held, connect the supply (9-30 volts) to the DualCom's supply Terminals until the sounder 'beeps'.

THIS SHEET LEFT
INTENTIONALLY BLANK
FOR EDITORIAL PURPOSES

THE PREVIOUS PAGE = 20

THE NEXT PAGE = 28

Fault & Auxilliary Relay Outputs

The Fault and Aux relays operate when the DualCom has a path fault and under other conditions (e.g. comms sent successfully).

Where the installation is specified to the EN 50131 and PD6662 standards then connect the Fault (and Aux) output(s) to the Control Panel. Fault output options may be selected using the A & B buttons. See Table 2 and Appendix 1, Tables 30, 31 and 32. Further detail on PD6662 is in the EN50131 : PD6662 Connections section on page 30.

The output relays have two terminals. These are supplied 'normally open'. Where 'normally closed' outputs are required each relay may be inverted using the A & B buttons. See Appendix 1, Tables 30, 31 and 32.

A & B Selection	Fault Output Relay	Aux Output Relay	Note
1	Normal Operation See Table 3	Aux Output operation is unchanged by selecting this option.	Fault Output = operation defined before EN50131/PD6662 introduced. Fault operation requires the Fault Output only. Selecting this option does not change the previous operation of the Aux Output.
2	BSIA Form 175 operation	Aux Output operation is unchanged by selecting this option.	Fault Output = PD6662 compliance Fault operation requires the Fault Output only. Selecting this option does not change the previous operation of the Aux Output.
3	Radio path fault	Wired path fault	Fault Output = PD6662 compliance Aux Output = PD6662 compliance Fault operation requires the use of Fault AND Aux Outputs
4	Radio & Wired path faults	Radio OR Wired path faults	Fault Output = PD6662 compliance Aux Output = PD6662 compliance Fault operation requires the use of Fault AND Aux Outputs

Table 2

For compatibility with older Control Panels, the 'Normal' mode may be selected using the A & B buttons option 1. See tables 2 & 3 and Appendix 1, Tables 30, 31 and 32.

Fault Output Relay	Panel in Day state	Panel in Set state	Panel in Set state + in Alarm
PSTN path fault only	Continuous	2 second Pulse	No Fault relay action
Radio path fault only	Continuous	2 second Pulse	No Fault relay action
Both PSTN and Radio path fault	Continuous	Continuous	Continuous
3 unsuccessful attempts on PSTN	2 second Pulse	2 second Pulse	2 second Pulse
10 unsuccessful attempts on VDN	2 second Pulse	2 second Pulse	2 second Pulse
Total fail PSTN & VDN	Continuous	Continuous	Continuous

Table 3

Fault & Auxilliary Relay Outputs (continued)

In addition to the fault output options on the previous page, **all** output options may be selected using the CS0054 Programmer. Using the Programmer, any Fault Output option may be used with any Aux Output option. See Table 4 & 5.

Contact CSL Technical Support for Outputs, Programming or further advice.

Fault Output Relay	Note
Normal Operation	Operation described in Table 3
BSIA Form 175 operation	May be used for PD6662 compliance
Radio path fault	May be used with Aux Output for PD6662 compliance
Radio & Wired path faults	May be used with Aux Output for PD6662 compliance
Radio OR Wired path faults	
Wired path fault	

Table 4

Aux Output Relay	Note
Wired path fault	May be used with Fault Output for PD6662 compliance
Radio OR Wired path faults	May be used with Fault Output for PD6662 compliance
Remote Reset	Aux Output operation controlled from the CS0054 Programmer
Exit Abort OR Remote Reset	Aux Output operation controlled from the CS0054 Programmer or Exit Abort detected by DualCom
Communications Successful	1 second pulse after any successful call
AVI Output	Follows selected active inputs
SMS Remote Control	Aux Output operates when SMS text message is sent to the DualCom from a mobile phone

Table 5

The maximum electrical rating of the Fault and Aux relays is 60 volts, 100mA. These limits must not be exceeded.

EN50131 : PD6662 Connections

Path Fault Conditions

Where the installation is specified to the EN 50131 and PD6662 standards then connections will be required between the DualCom and the Control Panel to indicate a single or a multiple path fault condition.

The Fault (and Aux) relay output(s) are used for this. These outputs may be preset to operate in one of 3 ways as shown below. Check which method(s) are available on your Control Panel and connect as required.

a). Fault relay = Operates as described in BSIA Form 175, Aux relay = unused.

b). Fault relay = Radio path fault, Aux relay = Wired path fault.

c). Fault relay = multiple path fault, Aux relay = single path fault.

Select the Fault & Aux Relay Output options using the A & B buttons. See the Fault & Auxilliary Relay Output section, and Appendix 1, Tables 30, 31 & 32.

The Fault & Aux Relay Outputs options may also be selected using the CS0054 Programmer. See the CS0054 and the CS2364 Programmer manuals.

Where the 'BSIA Form 175 operation' is selected above, then a corresponding 'ATS Test' output from the Control Panel to the DualCom will be required. For 'ATS Test' output connections and the Input Learning feature see Remote Servicing below.

Contact CSL Technical Support for Outputs, Programming or further advice.

Remote Servicing

EN 50131 and PD6662 standards describe Remote Servicing. Where the Control Panel needs to trigger the DualCom to send test calls to the ARC, the Test output on the Control Panel will need to be connected to the DualCom. This connection is also required when 'BSIA Form 175 operation' is required for fault operation.

Depending on the type of Control Panel used (and/or the wiring connection), the 'ATS Test' output may be a voltage output that changes from 0 volts to a positive voltage (5v to +30v), or it may change from a positive voltage to 0 volts. Connect the Control Panel 'ATS Test' output to the DualCom's 'ATS Test' input on the '**T**' terminal (next to the Input 8 terminal).

Where the DualCom 'T' input is used, the polarity will be correctly preset (as well as all the channel inputs) using the Input Learning feature. See Appendix 2.

Monitoring (Polling)

To meet the EN50131 requirements for monitoring on Grade 2, 3 and 4 installations, the DualCom sends regular polling calls to the GPRS Polling Server on the Radio path, on the PSTN path and where fitted, on the LAN (IP) path.

The Installer should ensure that a reporting action has been agreed with the ARC for path failure reports from the Gemini network Polling Server.

To make installation easier, the DualCom is supplied with polling disabled for 45 minutes. Polling will start automatically 45 minutes after power-up or reset.

For some testing functions it may be advantageous to turn Radio polling off. See Appendix 1, Table 30 & 31. Polling will be re-enabled by the A & B buttons or when power is cycled or the DualCom is reset.

Remember to re-enable polling when testing is completed.

21CN Mode

Between 2008 and 2015 the UK PSTN telephone system will be upgraded. This is expected to impact every telephone line in UK upon the changeover from the current equipment to the new 21CN equipment.

In order to ensure that your customer is not affected at the time of changeover, DualCom's in Grade 2 installations may be temporarially upgraded to G3 performance. This will ensure that your customer does not suffer any reduction in their security.

When the upgrade schedule and other information becomes available, additions will be made to the CSL DualCom website: www.csldual.com

Grade	Radio Polling	PSTN Polling
2	1 hour	1 week
3	10 minutes	1 day
21CN Mode (For Grade 2 installations, for 14 days only)	10 minutes	1 day

Table 6

Monitoring (Network Connection)

The paths used by DualCom for sending alarm and other messages are also monitored for their connections to the various networks.

On the PSTN this is done by the DualCom measuring the DC voltage supplied by the telephone exchange. Optionally, the absence of the dial tone may be selected to indicate a failed connection.

Other PSTN monitoring options are also available. Call Tech Support for details.

GPRS/GSM Radio Test Set

The CS2366 is a Radio Test Set for use with GPRS and GSM Radio Networks and the CS2000 and CS2300 range of GPRS & GSM DualComs.

It may be used to aid positioning and the testing of GPRS and GSM aerial systems.

The Test Set will measure and display radio signal strength received, also the level of interference may be measured and sources of interference identified.

The Test Set contains a battery allowing remote operation for up to 12 hours. The internal battery may be recharged from the supplied mains plug-top power supply.

The Test Set is contained within a strong protective sleeve. It is supplied complete with a charger, aerial and manual, and is covered by a no-quibble 'unit exchange' 2 year guarantee.

Fig 12

Telephone Line Connection

There are several different types of telephone line available from different service providers.

DualCom requires an **analogue** telephone line connection. 'Earth Loop Calling' or 'Earth Calling' types of analogue telephone line can **not** be used.

DualCom **can not** be **directly** connected to any type of digital telephone line.

For Broadband connection see page 39 - 40.

Earth connection

In accordance with EN regulations DualCom **does not** require an Earth connection at the telephone line terminals.

Analogue PSTN Telephone Line

The analogue PSTN is a communication network where the line from the exchange equipment and the service supplied to the subscriber is 'analogue', i.e. not 'digital'. See Fig 13.

A telephone line is always terminated at the users premises by an NTP (Network Termination Point) which is provided by the telecoms Service Provider. This is a socket or connection where the users equipment can be connected. Some NTPs provide a socket **and** terminals for connection. In many cases, the NTP operates using power supplied from the exchange equipment via the telephone line.

An **analogue PSTN** telephone line may be provided by BT or any of the other 44 telecomms service providers in UK. DualCom can be connected to any of these company's PSTN analogue lines.

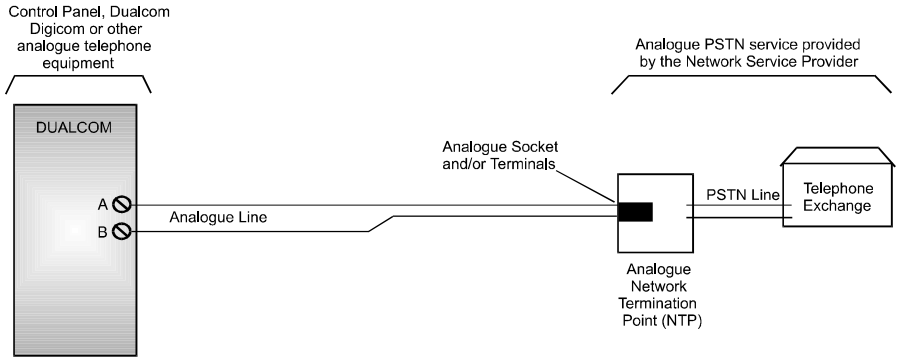

Analogue PSTN Telephone Line

Fig 13

PSTN Line Connection Options
DualCom's PSTN connection requires an **analogue telephone line** (also called a POTS line). Where the analogue telephone line also carries ADSL (Broadband) signals refer to ADSL later in this section.

Connecting other telecoms equipment IN PARALLEL to the analogue telephone line used by DualCom can stop the unit sending polling calls and alarm calls to an Alarm Receiving Centre. Parallel connection should NOT be used for DualCom when it is used in a security system.

There are several ways that a DualCom may be connected to a PSTN telephone line particularly when other equipment needs to share the same telephone line. Some require that your Telecom Service Provider supplies particular line features. Some require NVM programming options.

The highest security PSTN line for DualCom (Recommended):
A PSTN line supplied as 'outgoing calls only', i.e. Incoming Ringing Barred,
AND the PSTN line is ex-directory,
AND the PSTN line goes to the DualCom ONLY. Other equipment can be connected to the DualCom A1 & B1 terminals (i.e. series connection) to make outgoing calls only. See Fig 16.

The next best security option for a PSTN line (Recommended):
A PSTN line supplied with the '3-way calling' feature,
AND the DualCom NVM is programmed for '3-way calling',
AND the PSTN line goes to the DualCom ONLY. Other equipment can be connected to the DualCom A1 & B1 terminals (i.e. series connection) for incoming and outgoing calls. See Fig 16.

The 'no security' option (NOT Recommended):
A PSTN line supplied without 'outgoing calls only' or the '3-way calling' feature. This option can **not** cancel or 'hold' incoming calls and these **will** inhibit the DualCom from making a telephone call to the Alarm Receiving Centre.

Parallel Connection (Do NOT use):
*The DualCom A & B terminals connect to the telephone line, **and** other equipment connects directly to the same telephone line. See Fig 14.*
*This connection option can **not** cancel or 'hold' incoming or outgoing calls and these **will** inhibit DualCom from making polling & calls to the ARC.*

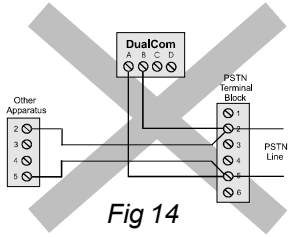

Fig 14

PSTN Line Connection (DualCom ALONE on line)
Your Telecom Service Provider should be asked to supply and fit an analogue line and an NTP with terminals near the alarm system. The alarm installer should then follow steps 1 & 2 below. See Fig 15 & 16.

Series Connection (DualCom & OTHER EQUIPMENT on line)
Your Telecom Service Provider should be asked to supply and fit an analogue line and an NTP with terminals near the alarm system. The alarm installer should then follow steps 1 to 3 below. See Fig 15 & 16.

1. Connect a PSTN cable to the A & B terminals. Screwdriver access is provided in the DualCom so that the lid need not be removed. See Fig 1.

2. Connect the other end of the cable to the Terminal Block connections for the incoming telephone line, marked A & B, or 2 & 5.

3. If the PSTN line used by DualCom is shared with other customer apparatus (e.g. telephone, fax or answer machine) connect the DualCom's terminals marked A1 and B1 to a new PSTN Master Socket. The customer may then plug their phone, fax etc, into that socket. See Fig 16.

   A PSTN Master Socket type LJU2/4A is suitable and has screw terminals for connection. These can be obtained from many electrical distributors including:

CPC	Part Number: TE 05285
Farnell	Part Number: 916-638 or 101-3290
Maplin	Part Number: FT48C
Rapid	Part Number: 24-0116
RS	Part Number: 472-534

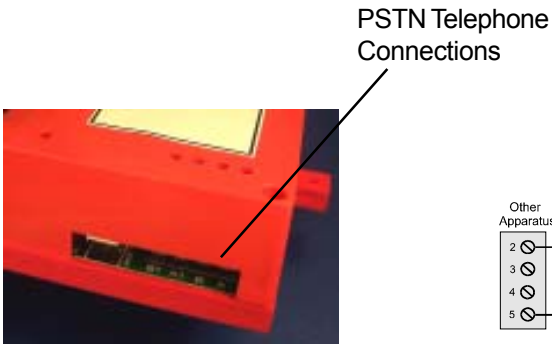

Fig 15

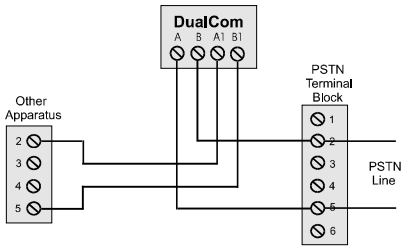

Fig 16

PABX (Private Automatic Branch Exchange)
A PABX is a telephone exchange in one business or building (where a dial 9 is needed for an outside line). It connects to one or more outside telephone lines and has two or more extentions within the business or building. See Fig 17.

DualCom may be connected to one of the outside telephone lines where they are the analogue PSTN type.

The extentions within the building may be analogue or digital. Where an extention is **analogue**, a normal phone or fax machine may be connected. DualCom may be connected here. See Fig 18.

Where the PABX is mains powered and it is not battery backed-up then the extention line to the DualCom may fail in the event of a mains failure. This may make **this type of telephone connection unsuitable for DualCom**.

Where the extention is a digital line then a special 'feature phone' is usually required, provided by the manufacturer of the PABX equipment. DualCom can **not** be **directly** connected to any type of digital telephone line.

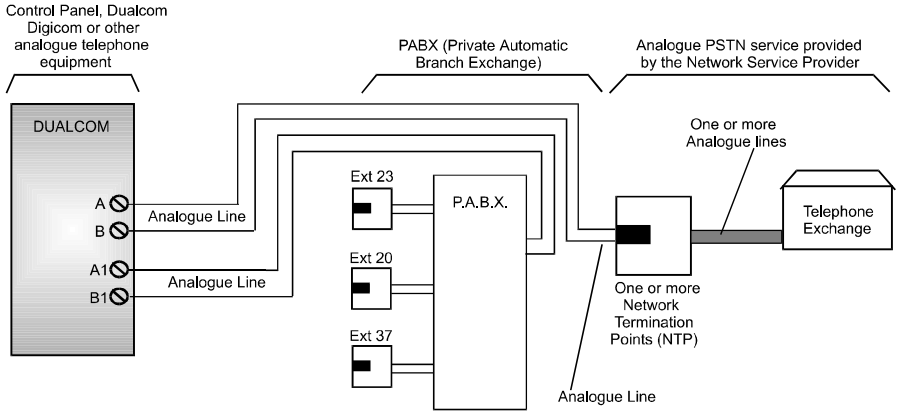

PABX with connection to Analogue PSTN Line
Fig 17

PABX (Private Automatic Branch Exchange)

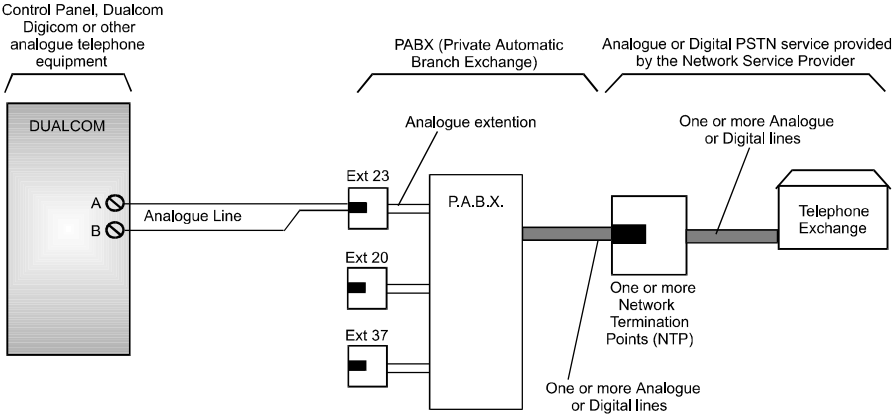

PABX with Analogue extension
Fig 18

ISDN (Integrated System Digital Network)

The digital ISDN is a communication network where the line from the exchange and the service supplied to the subscriber is ‘digital’, i.e. not ‘analogue’. An ISDN line can carry several calls simultaneously.

A ‘primary rate’ or ISDN30 line can carry the equivalent of up to thirty simultaneous calls. This type of digital teltephone line normally connects directly to a PABX telephone exchange. See Fig 18.

A ‘basic rate’ or ISDN2 line can carry the equivalent of two simultaneous calls.

An ISDN line is always terminated at the users premises by an NTP (Network Termination Point) which is provided by the telecoms Service Provider. The NTP is a socket or connection where the users equipment can be connected.

In many cases, the ISDN NTP operates using power supplied from the exchange equipment via the ISDN telephone line, however some types of NTP may require a connection to the mains supply at the users premises, e.g. Business & Home Highway.

Where the NTP is mains powered and it is not battery backed-up then the line to the DualCom may fail in the event of a mains failure. This may make **this type of telephone connection unsuitable for DualCom**.

Home Highway, Business Highway

Home Highway or Business Highway is the marketing name for a ‘basic rate’ ISDN2 line supplied by BT with an NTE9 NTP.

The NTE9 NTP provides two digital sockets, it includes an ISDN-Analogue converter and two analogue telephone sockets. This type of NTP can have an analogue phone, fax, modem etc. connected at either or both of the analogue telephone sockets.

Power for the NTE9 comes from the exchange equipment via the ISDN line **and** also from the mains supply at the users premises.

In the event of mains failure, the right-hand analogue telephone socket on the NTE9 will cease to operate but all other functions are powered from the exchange equipment. It is important therefore to **connect DualCom** to the **left-hand** analogue telephone socket on the NTE9. See Fig 19.

A **maximum** of two calls on an NTE9 may be in progress at the same time. If two calls are in progress it is **impossible** to make another outgoing call or receive another incoming call.

The ‘two call maximum’ means that if two calls are in progress then any other calls in or out can **not** be made. This limit may make **this type of connection unsuitable for DualCom.**

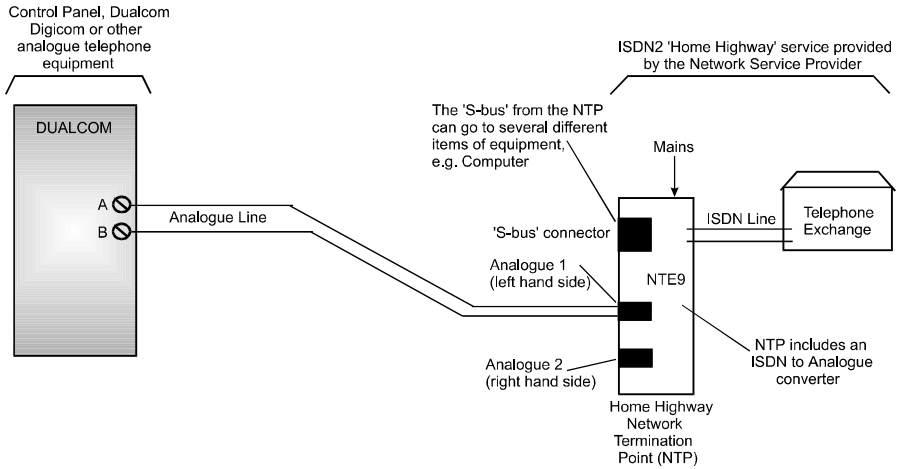

ISDN2 Home & Business Highway
Fig 19

ADSL (Asynchronous Digital Subscriber Line) or 'Broadband'

When an analogue PSTN telephone line also carries ADSL (Broadband) signals and it is used by a security system e.g. DualCom, then an ADSL (Broadband) filter MUST be used.

A filter is used to separate the analogue telephone signals from the ADSL (Broadband) digital data signals because the **phone or security system** may be **disrupted or completely inhibited** if ADSL (Broadband) digital data is allowed into them from the telephone line.

The CSL CS0730 Security ADSL Filter is designed specifically for use with security systems. It includes spare terminals to aid wiring that are labelled 'Pass Through'. This item meets all of the requirements of the British and European telephone and security standards. See Fig 25.

Other types of filter and plug-in filters **should not** be used for Series Connection of a security system to the telephone line.

CS0730
Security ADSL Filter
Fig 25

Serial Connection to a PSTN (and Broadband) telephone line is shown in Fig 26.

The installer must ensure that:

1. The user's telephone wiring is disconnected from the NTP and reconnected to the CS0730 ADSL Filter .

2. The NTP connects **only** to the CS0730 ADSL Filter and to **no other** wiring or telephone sockets.

3. The wiring between the NTP and the the CS0730 ADSL Filter can **not** be unplugged by the user.

4. The user can **not** plug a phone/fax etc. into the NTP.

5. The terminals 2,3 & 5, A & B and A1 & B1 are connected exactly as shown in Fig 26.

Simple ADSL (Broadband) Filter
Where the only items connected to the DualCom's A1 and B1 terminals are analogue equipments (i.e. phones but not computers) then the CS0720 Filter may be used between the telephone line and the DualCom's A and B terminals.

ADSL (Asynchronous Digital Subscriber Line) or 'Broadband'

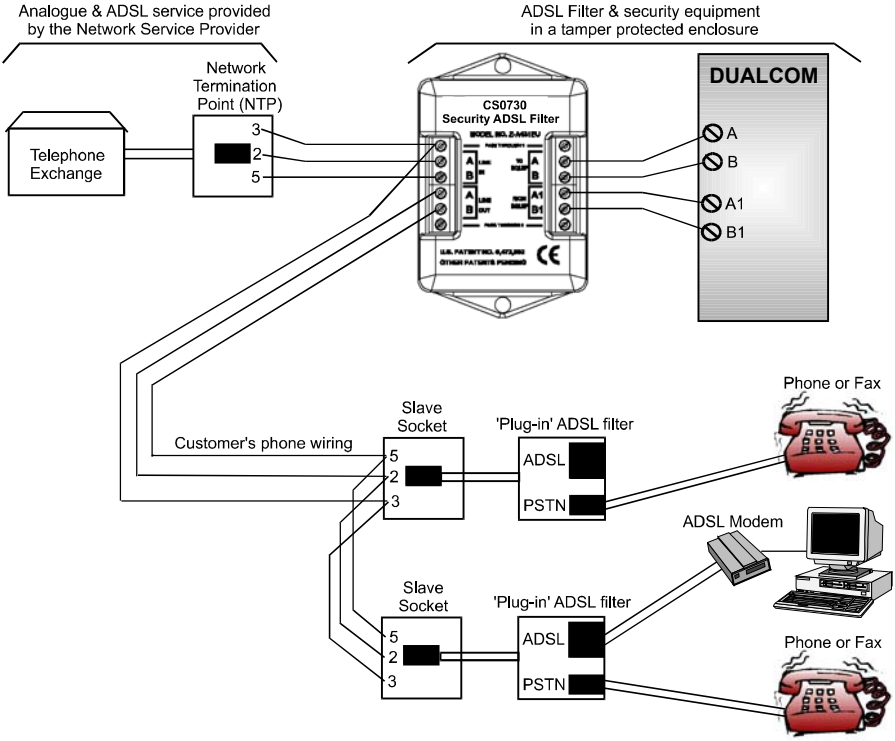

Serial PSTN Connection
using the
CS0730 Security ADSL Filter
Fig 26

Q. Why is a Broadband Filter necessary ?

A. When ADSL (Broadband) digital data is supplied on a normal PSTN telephone line then an ADSL (Broadband) Filter **must** be fitted between that telephone line and each item of 'non digital' equipment because:
1). The operation of 'non digital' equipment may be **disrupted or completely inhibited** if ADSL (Broadband) digital data is allowed into it from the telephone line.
2). The operation of the ADSL (Broadband) equipment may be **disrupted or completely inhibited** by the connection of unfiltered 'non digital' equipment to the telephone line.

'Non digital' equipment means anything that can be used on a normal analogue PSTN telephone line, e.g. a Phone, Fax, DualCom, Control Panel Digi-Modem.

System Power Supply and Battery

DualCom requires a supply of 9.0 to 30.0 volts DC.
At 12 volt supply, the quiescent current is 30mA.
At 24 volt supply, the quiescent current is 15mA.
Dualcom requires 100mA for the few seconds that it is activated.

The CS5351 Expander Card and the CS5355 LAN(IP) Card requires a supply of 9.0 to 30.0 volts DC.
At 12 volt supply, the quiescent current is 20mA.
At 24 volt supply, the quiescent current is 10mA.

Note: The supply voltage to the DualCom must not exceed +15 volts when:

The CS2325 Plug-on Adapter is used, or
The CS2351 Plug-on Expander Board is used, or
The CS2355 Wired LAN Card is used.

The **installer must ensure** that the Alarm System power supply(s) is rated to provide **adequate power** for this apparatus and for **any other apparatus** drawing power from the Alarm System power supply(s).

Only power supplies conforming to EN60950, EN41003 or International Safety Standards and carrying the CE mark should be used with this apparatus.

The Power Supplies' battery must be suitable to support operation for the specified time. Refer to the EN50131 Power Supply standard for the Grade of the installation.

If DualCom receives its power from a Power Supply that is additional to the alarm system, ensure that the 0 volt connection on the additional power supply is connected to the 0 volt connection on the alarm system.

If the supply voltage falls to the 'low supply voltage' limit, DualCom will send a 'low-battery signal to the ARC. The 'low supply voltage' limit is preset to 11 volts. When power is restored above 12.0 volts a test call (or battery voltage restore signal) will be sent to the ARC.

If the supply voltage continues to fall below 9 volts there will be insufficient power to operate the DualCom.

Note: The '+' terminal (next to the Aux relay terminals) is a voltage **output** to aid input triggering only. **This terminal is NOT the supply connector.** See Fig 2 & 27 and Appendix 2.

System Power Supply and Battery (continued)

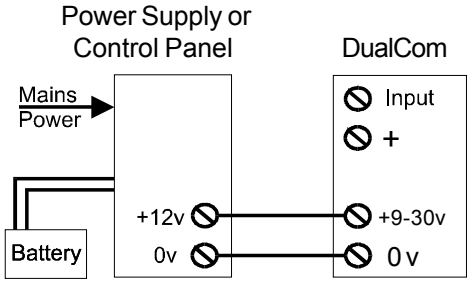

Fig 27

NVM Programming

DualCom GPRS is supplied with its NVM already programmed for communication with the designated ARC and fitted to its socket. This NVM should not be removed from its socket.

NVMs from other types of DualCom **will not** work in DualCom GPRS.

The CS0054 Programmer for DualCom is available from CSL. This will read the DualCom's operational parameters and the diagnostic information, e.g. received signal strength.

Contact CSL Technical Support for further information.

SMS (Short Message Service) Sending

On the current DualCom GPRS, there is reduced facility to send SMS (text) messages to mobile phones.

Contact CSL Technical Support for further information.

SMS Remote Control

When the Aux Output is selected for SMS Remote Control (See Fault & Aux Outputs section) then the Aux Output relay may be switched on or off by sending an SMS (text) message to the DualCom from a mobile phone.

This may be used to remotely control any other item, e.g. lighting, gates.

Contact CSL Technical Support for further information.

THIS SHEET LEFT
INTENTIONALLY BLANK
FOR EDITORIAL PURPOSES

THE PREVIOUS PAGE = 42

THE NEXT PAGE = 47

APPENDIX 1

LED Indications

Status LEDs

There are 4 Status LEDs next to the A & B buttons. See Fig 31 below.

These LEDs indicate Call Progress, Faults and other activity on the Radio, LAN and PSTN paths. See Tables 14 to 21.

The Radio Service LED indicates status of the GSM/GPRS radio module. See Table 13 below.

The A & B buttons and the the 7-segment display are used for setup and measurement functions. See Tables 30 to 34.

In addition, the 7-segment display will also show error codes where errors exist in communication or operation. See Table 36.

Yellow Radio Service LED. See Fig 31 below

Yellow Status LED	Radio Path Indications	What you should do
Off	No power to DualCom radio module	Check supply.
On solid	Power-up/reset Registration	Wait 1 minute
Off + blink on once every 2 secs.	Radio Base Station detected. GSM service available. Locked-on. Ready for service. Note: GPRS service may / may not be available	

Table 13

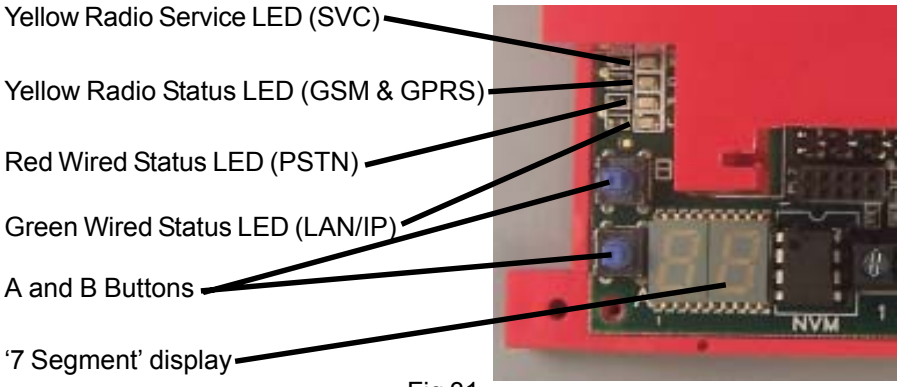

Fig 31

LED Indications (continued)

Yellow GSM Status LED (GSM & GPRS radio). See Fig 31, page 47.

Yellow Radio LED (GSM & GPRS)	Communications Progress Indications
Off	The Radio path is not activated. No faults. No up/downloading. Not in Input Learning mode.
On solid	Communications on the Radio path are active. GSM or GPRS path activated or dialling numbers.
On + 2 off blinks per second	Communications on the Radio path are active. Dialling completed, waiting for connection to ARC.
Medium Flash **On and Off 5 times per second**	Communications on the Radio path are active. Connected to ARC. Waiting for 'handshake'.
Rapid Flash **On and Off 12 times per second**	Communications on the Radio path are active. Handshake received, sending data to the ARC.
6 medium speed flashes	Communications successful. Data received correctly at the ARC.

Table 14

Yellow Radio LED (GSM & GPRS)	Path Fault Indications
Number of flashes = 1	SIM Card = OK. Radio module = OK. Connection fault. Check aerial, signal strength, and that the Service Provider is still providing a service (Paid the bill ?)
Number of flashes = 2	No response from the radio module. Check connections.
Number of flashes = 3	SIM Card not fitted correctly.
Number of flashes = 4	The SIM Card is locked. The PUK1 Code is required to unlock it.
Number of flashes = 5	The SIM Card PIN number is missing or incorrect
Number of flashes = 6	The SIM Card SMS message centre number is invalid
Number of flashes = 7	Radio module internal test failure. Cycle power. Re-test. If fault persists contact CSL Technical Support.

Table 15

Yellow Radio LED (GSM & GPRS)	Other Indications
LEDs alternate slow flash **Red, yellow, red, yellow ...** **On & Off 1 time per second**	NVM is faulty, missing, incorrect type or fitted incorrectly.
LEDs alternate fast flash **Red, yellow, red, yellow ...** **On & Off 5 times per second**	NVM is the correct type and is working, but is not programmed correctly or is not programmed at all.
LED On + 3 short off-blinks	Up/downloading (Remote programming) in progress
Red & Yellow LEDs 4 flashes each **4 Red, 4 Yellow, 4 Red, 4 Yellow...**	Input Learning mode. DualCom is 'learning' the quiescent (non-active) state of its input terminals

Table 16

LED Indications (continued)

Red PSTN Status LED (Telephone line). See Fig 31, page 47.

Red Wired LED (PSTN)	Communications Progress Indications
Off	The PSTN path is not activated. No faults. No up/downloading. Not in Input Learning mode.
On solid	Communications on the PSTN path are active. . Path activated or dialling numbers.
On + 2 off blinks per second	Communications on the PSTN path are active. Dialling completed, waiting for connection to ARC.
Medium Flash On and Off 5 times per second	Communications on the PSTN path are active. Connected to ARC. Waiting for 'handshake'.
Rapid Flash On and Off 12 times per second	Communications on the PSTN path are active. Handshake received, sending data to the ARC.
6 medium speed flashes	Communications successful. Data received correctly at the ARC.

Table 17

Red Wired LED (PSTN)	Path Fault Indications
Number of flashes = 1	PSTN telephone line DC voltage is very low or absent
Number of flashes = 2	Another phone (or fax, modem etc.) on the same PSTN line is off-hook and this may inhibit DualCom from making a telephone call.
Number of flashes = 3	Incoming ringing is detected and this may inhibit DualCom from making a telephone call.
Number of flashes = 4	The regular dial-tone test has failed indicating that there may be a PSTN line fault. This can inhibit DualCom from making a telephone call. Check that the Service Provider is still providing a service (paid the phone bill?).

Table 18

Red Wired LED (PSTN)	Other Indications
LEDs alternate slow flash Red, yellow, red, yellow ... On & Off 1 time per second	NVM is faulty, missing, incorrect type or fitted incorrectly.
LEDs alternate fast flash Red, yellow, red, yellow ... On & Off 5 times per second	NVM is the correct type and is working, but is not programmed correctly or is not programmed at all.
Red & Yellow LEDs 4 flashes each 4 Red, 4 Yellow, 4 Red, 4 Yellow...	Input Learning mode. DualCom is 'learning' the quiescent (non-active) state of its input terminals

Table 19

LED Indications (continued)

Green LAN Status LED (Wired IP). See Fig 31, page 47.

Green Wired LED (LAN / IP)	Communications Progress Indications
Off	The Wired LAN path is not activated. No faults. No up/downloading.
On solid	Communications on the Wired LAN path are active. . Path activated or dialling numbers.
On + 2 off blinks per second	Communications on the Wired LAN path are active. Dialling completed, waiting for connection to ARC.
Medium Flash On and Off 5 times per second	Communications on the Wired LAN path are active. Connected to ARC. Waiting for 'handshake'.
Rapid Flash On and Off 12 times per second	Communications on the Wired LAN path are active. Handshake received, sending data to the ARC.
6 medium speed flashes	Communications successful. Data received correctly at the ARC.

Table 20

Green Wired LED (LAN / IP)	Path Fault Indications
Number of flashes = 1	Unable to communicate with the plug-on Wired LAN (IP) Card
Number of flashes = 2	LAN path failure. 3 sequential LAN calls have failed.

Table 21

APPENDIX 1

A & B buttons & the 7 Segment Display

The **A** & **B** buttons are used for setup and measurement functions.

When no buttons are pressed for a 1 minute period, the display will automatically return to the received radio signal strength (FSSI) display.

The DualCom 7-segment display has 3 distinct modes.

1. **Power up - Reset Mode**
   The **A** & **B** buttons can clear some NVM settings. **See Table 34**.

   The display first shows all segments 'on' and all LEDs 'on' for 1 second.
   Then, the software version number as two separate 1 or 2 digit numbers.
   Then, the EN50136 Grade,
   Then, the initialisation states of the Radio, LAN & PSTN paths.

   Press A button then Reset or Power-up the DualCom. This will clear the Plug-on Adapter memory and clear any pending calls stored in the NVM. The button should be held down until the Dualcom 'beep-beeps' to acknowledge this function. This also resets the polling delay to 45mins.

2. **Communication Mode**
   The **A** & **B** buttons are disabled during communication. **See Table 33**.

   The display shows large **C** for Wired comms. and small **c** for Radio comms. Call progress is shown by C1, C2, C3 and 'A' to indicate a successful call.

.

   The appropriate GSM, PSTN or LAN LEDs will light to indicate activity and call progress.

3. **Normal Mode**
   This 'normal' mode means that the DualCom is not in Power-up - Reset mode and not in Communication mode. **See Tables 30, 31,32 and 36**.

   The **A** & **B** buttons can select display options and Program the NVM.

   When the **A** & **B** buttons are not pressed for 1 minute, the display will return to the received radio signal strength (FSSI) value (00-99).

   Any Error Code will display for 1 minute before reverting to the FSSI value.

APPENDIX 1

The 7 Segment Display - Normal Mode

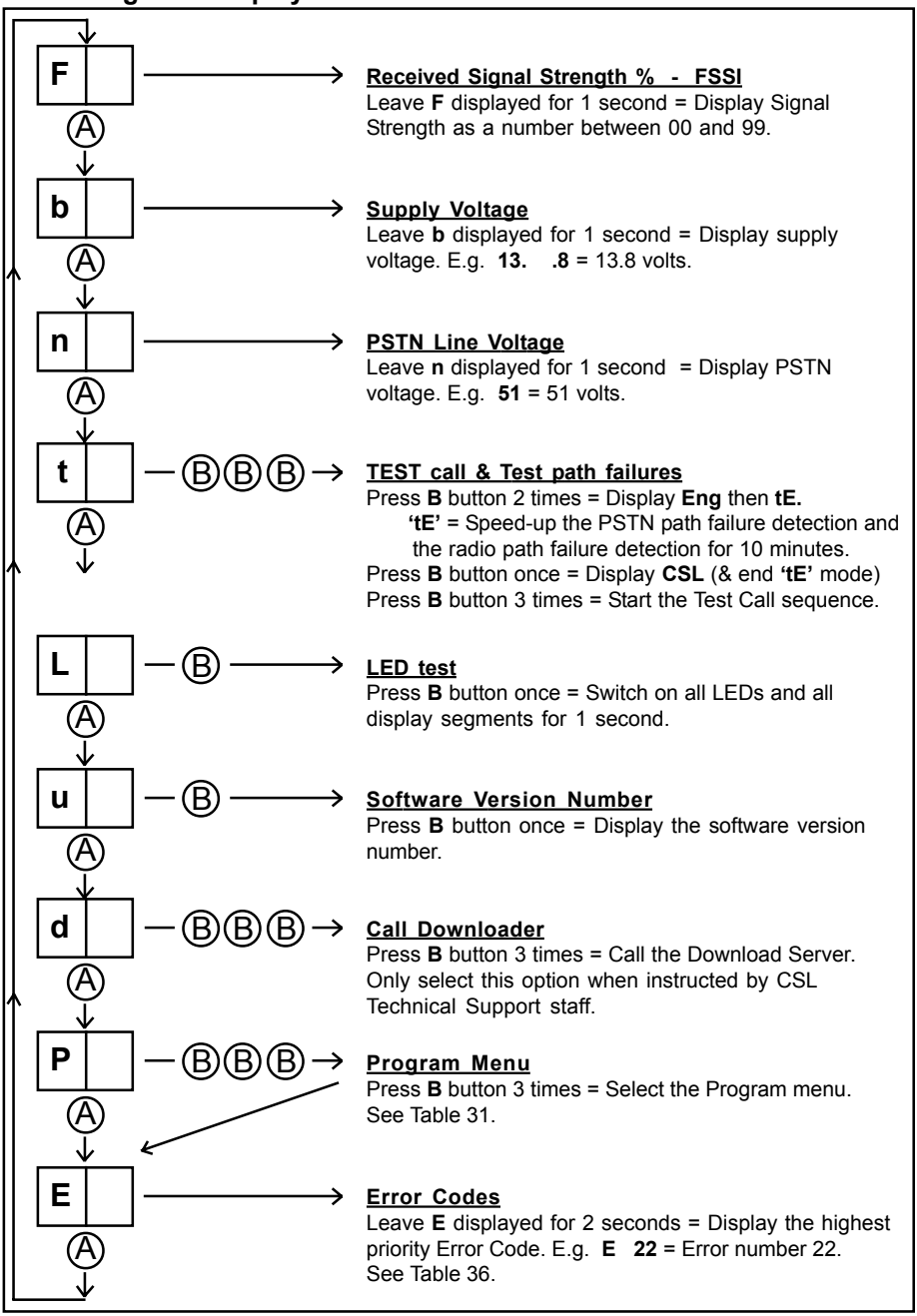

Table 30

APPENDIX 1

The 7 Segment Display - Normal Mode - Program Menu

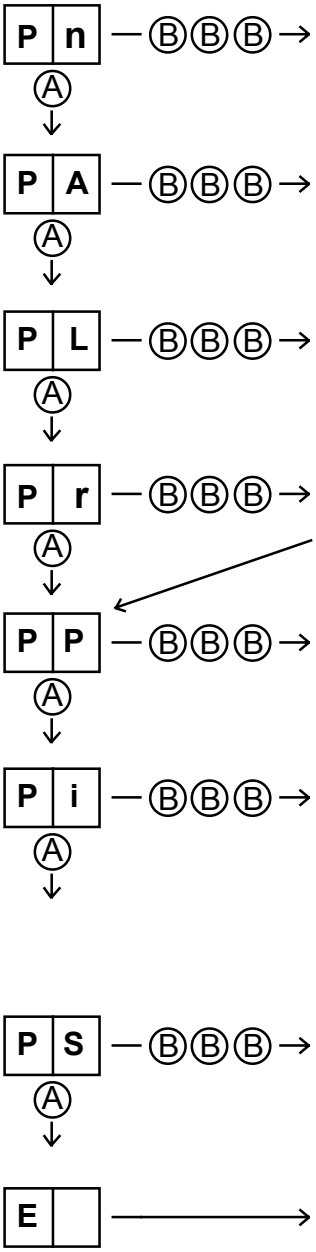

Program Menu - PSTN
n flashing = PSTN disabled
n on = PSTN enabled
Press **B** button 3 times = Change PSTN state.

Program Menu - PABX
A flashing = PABX disabled (no dial '9' pre-digit)
A on = Dial 9 pre digit before telephone number(s).
Press **B** button 3 times = Change PABX state.

Program Menu - LAN
L flashing = LAN disabled
L on = LAN enabled.
Press **B** button 3 times = Change LAN state.

Program Menu - Relay Menu
Press **B** button 3 times = Select the Relay menu.
See Table 32.

Program Menu - Polling
P flashing = Polling disabled.
P on = Polling enabled.
Press **B** button 3 times = Change Polling state.

Program Menu - Inputs (Self Learning)
Press **B** button 3 times = Select the input learn state.
(The **i** will toggle, LEDs will rotate), then...

Press **B** button 3 times = Learn the current input settings for all 8 or 16 inputs and the **T** 'Test ATS' input.
(The **i** will stop toggling), then...

Press **A** button = Complete Program Inputs.

Program Menu - Radio Survey
Press **B** button 3 times = Select the Radio Survey state.
(The **dots** will toggle), then...

The number of GSM/GPRS radio base stations seen (greater than 15% signal strength) will be shown.

Return to Normal Mode
See **E** in Table 30

Table 31

APPENDIX 1

The 7 Segment Display - Normal Mode - Relay Menu

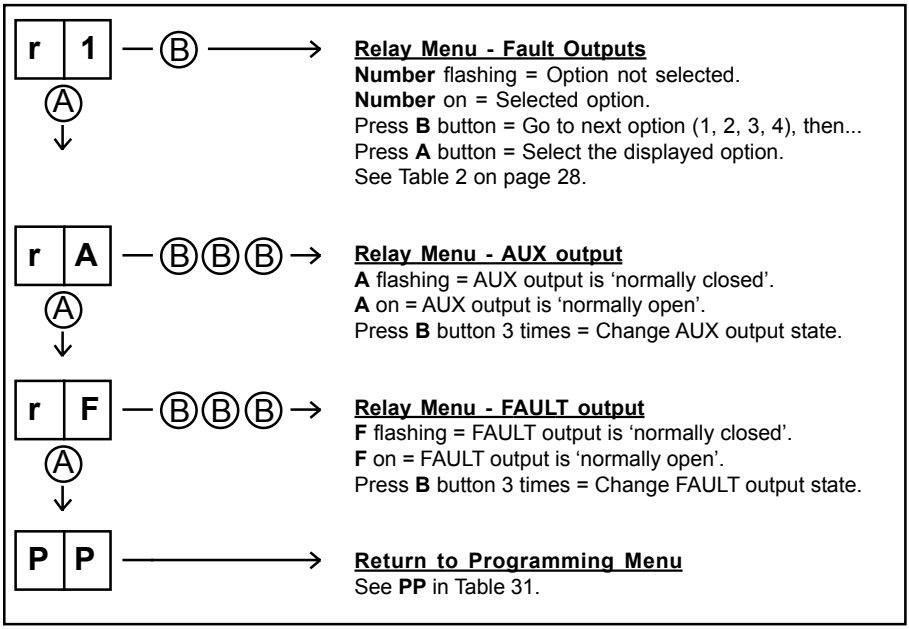

Table 32

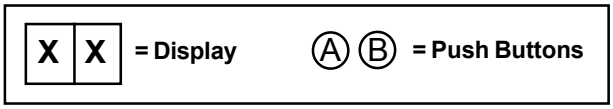

APPENDIX 1

The 7 Segment Display - Communication Mode

c 1 →	**Radio Communications (lower c display)** Call to ARC. E.g. intruder, PA, open, close, test On radio path.
c 1 →	**Radio Communications (upper c display)** Polling call. On radio path.
C 1 →	**Wired Communications (large C)** Call to ARC. E.g. intruder, PA, open, close, test On Telephone line (PSTN) or on LAN paths
C 2 C 3 A	**Call Progress** C1 = Comms active. Dialling numbers. C2 = Comms active. Waiting for ARC Rx 'handshake'. C3 = Comms active. Sending data to the ARC. A = Comms successful. Data received at the ARC.
L o →	**Low Supply Voltage** The Supply voltage is too low for correct operation, or it is dipping low when the DualCom is active.

Table 33

X X = Display Ⓐ Ⓑ = Push Buttons

APPENDIX 1

The 7 Segment Display - Power-up - Reset Mode

8. 8. →	**Lamp Test & Software Version number** At Power-up or Reset, Lamp Test. The display shows **8. 8.** and all LEDs will be on for 1 sec. The Software Version Number is then displayed. E.g. **1. 19** = Version 1.19. The sounder will beep twice. During the display of the Software Version Number, press & hold **A** button = Clear the 'pending call memory', and clear the 'Plug-on Adapter memory'. Release the **A** button when the sounder 'beep-beeps'.
L o →	**Low Supply Voltage** The Supply voltage is too low for correct operation, or it is dipping low when the DualCom is active.
r o →	**Reset Radio Module** DualCom is resetting the GSM/GPRS radio module. This will not display if the radio path has been disabled.
r L →	**Reset LAN Module** DualCom is resetting the LAN interface module This will not display if the LAN path has been disabled.
r n →	**Reset PSTN Chipset** DualCom is resetting the PSTN interface chipset This will not display if the PSTN path has been disabled.

Table 34

APPENDIX 1

Error Codes

Where errors exist, Error Codes may be displayed. This will be the letter 'E' followed by a number. The sounder will beep with each digit.

Where there are several errors then only the highest priority (the lowest E number) will be shown.

During operation an Error Code may be displayed for up to 4 minutes. During this time, if the fault is corrected, or another error of higher priority occurs then the display will indicate the new value.

At any time that the DualCom is quiescent, the highest priority Error Code (if present) may be displayed using the A&B buttons. See Table below.

Where the supply voltage is too low for DualCom operation but is sufficient to operate the display, 'Lo' will be seen on the display.

Error Code	Description	What You Should Do
0	No Errors	
'Lo'	Low supply voltage	Check supply voltage
1	NVM missing or not fitted correctly	Check NVM fitted correctly
2	NVM data error. Not programmed correctly	Check NVM programming. Call CSL Tech Support
3	NVM checksum fault	Check NVM programming. Call CSL Tech Support
4	Power fault. Voltage low etc.	Check supply voltage is in the 10 - 30 volt range at all times
5	485 Bus Port enabled but comms have failed	Check the 485 Bus Port connections to the Control Panel or the Plug-on Adapter
10	Radio. No base stations detected	Check aerial connection and base station signals
11	Radio. Not registered on any GPRS network	Check SIM Card and base station signals. Call CSL Tech Support
12	Radio. No response from radio module	Check module is fitted correctly. Check power. Call CSL Tech Support
13	SIM Card missing or not fitted correctly	Check SIM Card is fitted correctly
14	SIM Card locked/disabled. No radio path operation possible	PUK Code required to unlock SIM. Call CSL Tech Support

Error Codes (continued)

Error Code	Description	What You Should Do
15	SIM Card PIN number is wrong	Check SIM PIN number in NVM. Call CSL Tech Support
17	Radio module faulty	Power down. wait 1 minute. Re-power & re-check. Call CSL Tech Support
18	Radio. Interference or jamming signals detected.	Check local radio environment. Use a CS2366 Radio Test Set
21	PSTN line DC voltage = low or none	Check PSTN connections to A&B terminals
22	PSTN. A phone, fax etc. on the same line is off hook	Check for another phone, fax etc. on same line as DualCom or disable detection in the NVM
23	PSTN. Incomming ringing detected	Disable incomming ringing with Telephone supplier or disable detection in the NVM
24	PSTN dialling attempt. No dial tone	Check PSTN connections and that the service is available (has the bill been paid?)
25	PSTN. All call attempts have failed	Check PSTN connections and that the service is available (has the bill been paid?)
26	PSTN. Three successive call attempts have failed	Check PSTN connections and that the service is available (has the bill been paid?)
31	Radio. GPRS fault	Check SIM Card fitted correctly. Check GPRS service.
32	Radio. GPRS communications failure	Check SIM Card fitted correctly. Check GPRS service. Check NVM programming.
40	LAN(IP) Card enabled but comms to it have failed	Check LAN(IP) Card is fitted correctly or disable it in the NVM
41	LAN Ethernet cable (e.g. Cat5) not connected	Check LAN cable is connected to LAN(IP) Card. Check LAN cable is correctly connected to LAN/Router/Hub/Switch at other end.
42	LAN(IP) Card enabled but comms to it have failed	Check LAN(IP) Card is fitted correctly or disable it in the NVM
43	No response from the Default gateway. (the Router to the Internet)	Check LAN wiring, Router, power supplies and DualCom's IP programming. Call CSL Tech Support
44	LAN communications failed	Check DualCom's IP programming. Check Router is not firewalled. Call CSL Tech Support

Error Codes (continued)

Error Code	Description	What You Should Do
45	No response from WAN ping address	Check DualCom's IP programming. Check Router is not firewalled. Check Gemini Secondary Polling Server. Call CSL Tech Support
46	Not used	
47	Invalid Router, Gateway or WAN address	Check DualCom's IP programming
48	Faulty operation detected within the LAN(IP) Card.	Replace LAN(IP) Card
49	Faulty communications detected between DualCom & LAN(IP) Card	Check LAN(IP) Card is fitted correctly. Replace LAN(IP) Card
51	Radio path. All call attempts have failed.	Check all Radio settings in the NVM. Call CSL Tech Support
52	Wired path (IP or PSTN). All call attempts have failed.	Check all IP or PSTN settings in the NVM. Call CSL Tech Support
69	Not used	
99	NVM data error. Not programmed correctly	Check NVM programming. Call CSL Tech Support

E99 error detected at Power-up/Reset

If GSM is enabled: there must be a GSM number;
If Gateway is ticked, there must be a Gateway number & there must be a GSM account number.
If this fails GSM service is disabled.

If GPRS is enabled: there must be a GPRS IP address & Port number, and... there must be either a GSM account number or a GPRS account number.
If this fails GPRS service is disabled.

If LAN is enabled: there must be a LAN IP address & Port number, and... there must be either a PSTN account number or a LAN account number.
If this fails LAN service is disabled.

If PSTN is enabled: there must be a PSTN telephone number and a PSTN account number.
If this fails PSTN service is disabled.

99 error detected at Power-up/Reset (continued)

If PSTN polling is enabled: there must be a PSTN polling number and a PSTN account number.
If this fails PSTN Polling Service is disabled.

If ALL of the above fail, and if any Polling Service is ticked in the NVM, and...
if Polling was previously enabled, then an immediate E99 will occur.
If Polling was not enabled, a E99 will occur after 45 minutes.

After the normal sounder beeps have timed out, when E99 is present, the sounder will beep once every 5 minutes.

NOTE: Although paths will be disabled independently depending on the parameter programming as shown above, the E99 error will only occur if ALL paths have thus been disabled.

None of the above will affect SMS or the ability of the DualCom to accept incoming Programming calls, or make outgoing Download server calls upon request (assuming that this part of NVM programming is correct!).

APPENDIX 2

Input Connections

There are 8 input terminals on DualCom (12 with the CS2351 and CS2355 Expanders).

When DualCom is triggered, the voltages on the input terminals are 0 volts changing to a positive voltage, (normally +5 volts to +30 volts), or they may be a positive voltage changing to 0 volts. This is called 'positive applied' or 'positive removed' triggering.

The Inputs may be programmed to send an alarm call when a positive voltage is **applied** to an input or when a positive voltage is **removed**. See 'Input Self Learning' on page 61.

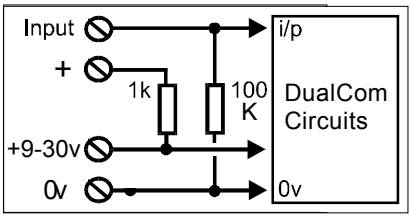

DualCom internal connections

The figure above shows the **internal** connections of the DualCom inputs.

The voltage supply from the Control Panel or Power Supply is connected to the +9-30v & 0v terminals.

Each of the input terminals on DualCom (and expander boards) is connected to 0 volts by a resistor. Therefore, by leaving an input terminal unconnected this will ensure that the input remains connected to 0 volts.

Note: The '+' terminal next to the 8 input terminals is a voltage **output** to aid input triggering only. **This terminal is NOT the supply connector.** See Fig 2 and above.

Examples of input triggering connections are shown below.

Input Connections (continued)

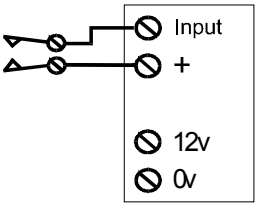

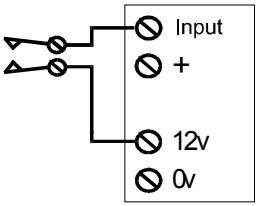

Examples of 'Positive Applied' triggering
Contact is 'Normally Open'. Input is normally at 0 volts.
When contact closes the input becomes +12 volts.

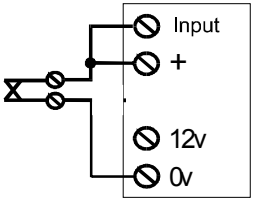

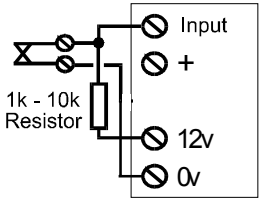

Examples of 'Positive Applied' triggering
Contact is 'Normally Closed'. Input is normally at 0 volts.
When contact opens the input becomes +12 volts.

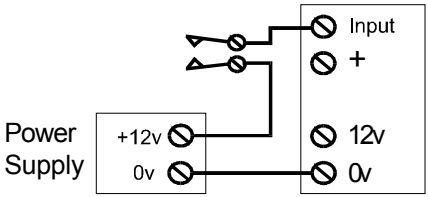

Example of 'Positive Applied' triggering
Contact is 'Normally Open'. Input is normally at 0 volts.
When contact closes the input becomes +12 volts.

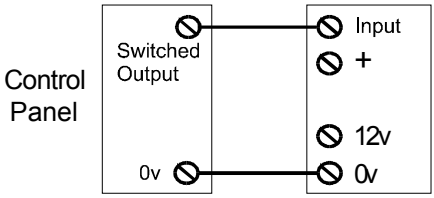

Example of 'Positive Applied' triggering
Control Panel Switched Output is 0 volts changing to a positive voltage

Input Connections (continued)

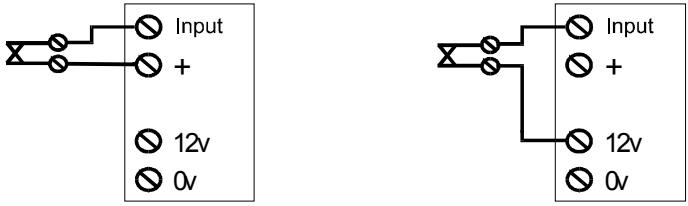

Examples of 'Positive Removed' triggering
Contact is 'Normally Closed'. Input is normally at +12 volts.
When contact opens the input becomes 0 volts.

Examples of 'Positive Removed' triggering
Contact is 'Normally Open'. Input is normally at +12 volts.
When contact closes the input becomes 0 volts.

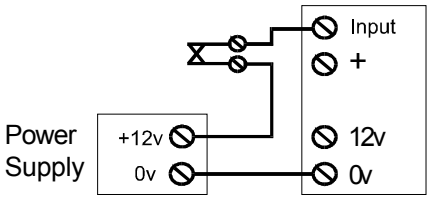

Example of 'Positive Removed' triggering
Contact is 'Normally Closed'. Input is normally at +12 volts.
When contact opens the input becomes 0 volts.

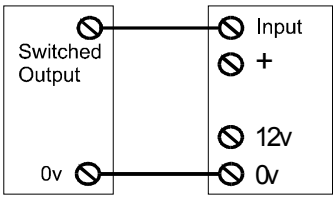

Example of 'Positive Removed' triggering
Control Panel Switched Output is a positive voltage changing to 0 volts

Input Connections (continued)

Input Learning

To aid installation, DualCom can learn the quiescent state of its inputs, i.e. the 'non-active' state. 'Non-active' means that the voltage on the alarm inputs are in the 'not in alarm' condition and open/close inputs are in the 'open/unset/day' condition. This includes the 'T' input. See EN50131, PD6662 section.

Input Learning allows the unit to be programmed during installation with 'positive applied' or 'positive removed' inputs. Input Learning will correct NVMs that have been supplied with incorrect input polarities.

1. Setup the inputs 'non-active' conditions by connecting a positive voltage or 'no' voltage (0v) on each input terminal as required.

   This is easily achieved by connecting the Control Panel outputs to the DualCom inputs, then put the Control Panel in the **'day state'** with **no activated detectors and all alarm conditions reset**. Ensure that the Test output is also in the quiescent state. Leave any unused DualCom inputs disconnected.

   Ensure that the **'open/unset/day'** state is selected on the Control Panel. **Do not** leave the Control Panel in the 'set' or 'engineering' states.

2. When the DualCom has completed its Power-up - Reset mode, the display will show the FSSI value (00-99).

3. Press the **A** button repeatedly until '**P**' is displayed, then:
   press the **B** button **3** times.
   The display will show '**P0**', '**P1**', '**P2**' etc..
   This is the Programming state.

4. Press the **A** button repeatedly until '**Pi**' is displayed, then:
   press the **B** button **3** times.
   The display will show '**Pi**' with the '**i**' moving left-right.
   This is the Inputs learning state.

5. Press the **B** button **3** times.
   The display will show '**Pi**' with the '**i**' not moving
   Input Learning has now been completed and the NVM has been updated.

6. Press the **A** button **once** to return to the Programming state.

This procedure is also shown in Appendix 1, Table 30 and 31.

APPENDIX 3

Plug-on Footprint

'Plug-on' pins are mounted on some Control Panels for connection to communication devices. The pins are fitted on a plastic spacer, 0.156 inches (3.96mm) pin centre to centre. There are two rows of 8 pins spaced apart by 4.25 inches (108mm) pin centre to centre.

The view below is looking at the pins on a Control Panel, onto which the CS2325 Plug-on Adapter plugs. Note that some equipments label the pins 9-16 as '1-8' as well as the pins that are 1 - 8.

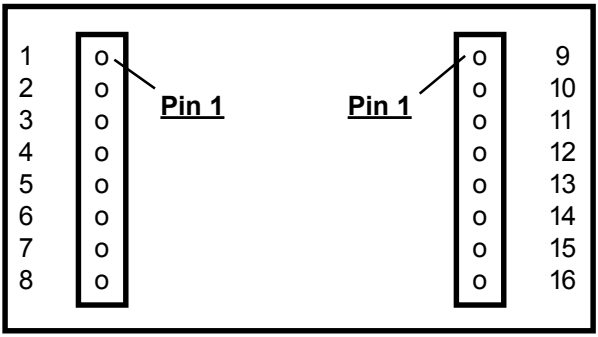

Pin Allocation

1	Input to DualCom	Input 1	Fire
2	Input to DualCom	Input 2	P.A.
3	Input to DualCom	Input 3	Burglar
4	Input to DualCom	Input 4	Open/Close
5	Input to DualCom	Input 5	
6	Output from DualCom	Tell Back	(comms successful)
7	Output from DualCom	Communications Fail	
8	Input to DualCom	(unused)	
9	Input to DualCom	+12 volts (from Control Panel)	
10	Input to DualCom	0v (from Control Panel)	
11	Input to DualCom	ATS Test input	
12	Input to DualCom	+5v (from Control Panel)	
13	Input to DualCom	Input 6	
14	Input to DualCom	Input 7	
15	Output from DualCom	PSTN Line Fail	
16	Output from DualCom	Input 8	(not used on older panels)

APPENDIX 4

Specification

Models	CS2300-R Stand Alone CS2301 Plug-on (CS2300-R + CS2325)
Dimensions	(h x w x d) 95 x 125 x 25 mm
Weight	250 grams
Temperature	-20C to +60C transit, -10C to +50C operating
Humidity	0 - 80% non-condensing
Mounting	Any orientation
Warranty	5 years
Power Requirement	9.0 - 30.0volts DC, 0.1volt max ripple
Current Consumption	30mA quiescent at 12 volt supply 15mA quiescent at 24 volt supply 100mA operating
LAN(IP) Card	20mA operating
Plug-on Accessories	Supply must not exceed +15 volts when CS2325, CS2351 or CS2355 are used.
Radio Path	GPRS & Data service on a GSM network
Aerial	50 ohm (nominal) on MMCX socket
LAN(IP) Path	10/100 Base-T port on RJ45 socket TCP/IP and UDP
Telephone Path	PSTN technology. CTR21 approved.
Expansion	9 to 12 inputs on CS2351, CS5351 & CS5355 LAN connection using CS5355 Plug-on (Control Panel) using CS2325
Low Battery	10.8-11.0 volts falling, 11.8-12.0v recovery
Outputs	2 ‘normally open’ relays (60v 100mA contacts)
Input Terminals	Max +30 volt, Min 0 volts DC (reference Supply 0v terminal), 100K pulldown to 0v.
User Servicable Parts	There are no user servicable parts within the DualCom.

Specification (continued)

Standards: Security Grade ATS Classification Environmental Emissions Installation	Suitable for use in alarm systems complying to: EN50136 Security Grade 1,2,3 & 4 EN50136 ATS classification 4 & 5 ATS 4 parameters: D2 M2 T3 S1 I2 ATS 5 parameters: D3 M3 T4 S2 I3 EN50136 Environmental classifications 1 & 2. EN55022 PD6662:2010

Regulatory Constraints

Before attempting to install DualCom, the installer must be aware that the CS2300 range of DualCom products may only be installed by a professional installer.

The Ringer Equivalence Number (REN) of the apparatus is 0.3. The sum of RENs of the individual items connected to one PSTN line should not exceed 4.

Intended Use

DualCom is designed for use as a signalling device for use with intruder, fire and similar alarm systems. It will create messages when triggered by the changing voltage situations on DualCom's input terminals, and it will send these to an ARC receiver when a communication path is established via radio or wired means.

Users are advised that the intended use should avoid situations where the rate of triggering exceeds the rate at which messages may be sent to, or received by the ARC's receiver.

DualCom includes a 'message memory' that will hold messages as they are triggered by DualCom's input terminals. When a path to an ARC receiver is established, the messages will be sent from the 'message memory'. When the 'message memory' is full of messages waiting to be sent then further triggering of DualCom's inputs will create no further messages.

APPENDIX 5

European PSTN Approval

The CS2300 range of DualCom products meet the requirements of the EU PSTN standard CTR21 and is approved for connection to any exchange line forming part of a Public Switched Telephone Network (PSTN).

AHCTR210 001 Declaration of Network Compatibility
The equipment has been approved in accordance with Council Decision 98/ / EC (5) for pan-European single terminal connection to the Public Switched Telephone Network (PSTN). However, due to differences between the individual PSTNs provided in different countries , the approval does not, of itself, give an unconditional assurance of successful operation on every PSTN network termination point.

In the event of problems, you should contact your equipment supplier in the first instance.

AHCTR211 001 Statement to Notified Body, Vendor and User
The equipment has been approved in accordance with Council Decision 98/ / EC (5) for pan-European single terminal connection to the Public Switched Telephone Network (PSTN).

The equipment has been designed for use in all EU countries.

Approval Authority:	**CE0168**
Approval Number for Dualcom range:	**608777**

International GSM Approval

The CS2300 range of DualCom products incorporate an independently tested and approved GSM/GPRS radio module that meets the requirements of International radio communication standards.

The GSM Radio Module Approval Authority is: 0681

APPENDIX 6

Glossary of Terms

ADSL Asynchronous Digital Subscriber Line

A 'wideband' digital communication service from a network provider to a subscriber that carries a high volume of digital data, most commonly for internet access. Sometimes called 'Broadband'. An ADSL service is often provided with a simultaneous analogue PSTN service on a Hybrid line.

Alarm Abort

A facility to reduce false alarms requiring police response. Specified by ACPO (The Association of Chief Police Officers) in UK. An Alarm Abort situation occurs when the alarm system is set, and an alarm occurs, and then it is reset by the alarm system being unset by a key or valid user code, all within 90 seconds.

This false alarm is often caused by the user of an alarm system failing to set the system correctly. The Alarm Abort signal identifies this situation to the ARC thus avoiding an unnecessary police visit to the site.

Analogue PSTN Analogue Public Switched Telephone Network.

The analogue national telephone system. Often just called the PSTN. Service is available to customers on twisted-pair wires that carries a DC supply provided from the network telephone exchange.

ARC Alarm Receiving Centre

A 24 hour manned centre (often privately owned & operated) capable of receiving & logging calls of alarm and forwarding them to security authorities and other relevant services. Often called a Central Station.

Broadband

See ADSL

Call Minder

A call answering service offered by some telecom Service Providers. When an incoming call to the subscriber's telephone is not answered, then the Service Provider can record it and forward it to the subscriber at a later time.

Central Station

See ARC

Glossary of Terms (continued)

Digital PSTN Digital Public Switched Telephone Network.
The digital national telephone system. Service is available to customers on twisted-pair wires that may carry a DC supply provided from the network telephone exchange, on optical fibre or other digital transmission medium. The digital service may be in ISDN format or another digital format.

DTMF Dual Tone Multi Frequency
The series of tones used by telephones to send dialling information to an analogue PSTN exchange. These tones are also used by the DTMF Fast Format and Contact ID alarms reporting protocols.

DTMF Fast Format Alarms Reporting Protocol
A protocol that is a sequence of analogue tones (push-button telephone tones) used to send via telephone lines a transmission to receiving equipment at an ARC, and to receive checking and acknowledgement replies from that receiving equipment. 8 or 16 channel DTMF Fast Format protocol is commonly used in burglar or intruder alarm equipment.

DualCom96 Alarms Reporting Protocol
This protocol is used by DualCom GPRS to send transmissions to receiving equipment at an ARC, and to receive checking and acknowledgement replies from that receiving equipment. This is a Modem type protocol

Earth Loop Calling
An older type of analogue PSTN or analogue PABX extention line. Normally provided with no DC voltage present on the line. Requires the line to be connected to earth to obtain a ‘dial tone’. DualCom can not be used with this type of telephone line.

GPRS General Packet Radio Service
Digital telephone service particularly (but not exclusively) for users that may be mobile for carrying digital data (typically internet) where the path from the user is by a radio link to one (or more) fixed sites.

Hybrid Line
A line that carries digital data and analogue signals simultaneously. Most commonly this is an ADSL digital service and an analogue telephone service on one line from a Service Provider to a subscriber.

Glossary of Terms (continued)

ISDN Integrated Services Digital Network
A digital communication network where services are provided via electrical or optical cables. This may also be a digital PSTN. The network is usually provided as a 2 channel or 30 channel ISDN service.

LAN Local Area Network
A digital communication network within buildings where services are provided via wired electrical or optical cables, or by radio (WiFi). Normally used for communications between computers, servers & routers.

NTP Network Termination Point
A telephone line is terminated at the users premises by a Network Termination Point which is provided by the Telecomms Service Provider. This is a socket or connection where the users equipment can be connected. The NTP is the responsibility of the Telecomms Service Provider.

NVM Non Volatile Memory.
An integrated circuit memory device that does not need any power to remember data.

PABX Private Automatic Branch Exchange
A small telephone exchange for use within one building or group of buildings. Commonly used in businesses where each phone in that business is an extention on that PABX. Usually connects to one or more analogue PSTN or ISDN telephone lines.

PSTN Public Switched Telephone Network.
A national telephone system. This may be analogue and/or digital. See Analog PSTN.

SMS Short Message Service.
Service provided by companies supplying a GSM communications system where a short text message may be sent to (and from) GSM mobile phones and read on the GSM mobile phone display.

SMS Message Centre
SMS messages are **not** sent ‘directly’ from one GSM phone (or DualCom) to another GSM phone. All messages are first sent to a Message Centre operated by the GSM Network Provider and then forwarded to the selected mobile phone(s). This normally takes a few seconds but delays of 30 minutes or more may be experienced during busy periods.

Glossary of Terms (continued)

WiFi Wireless LAN
See LAN

WEB SITE The CSL Internet Web Site
The CSL web site: *http://www.csldual.com* contains the latest copies of all manuals for all CSL products. Please ensure that you are working from the latest version. You can also download associated information and software samplers. CSL sales, shipping and contact information is here too.

3-Way-Calling
This is a service provided by some telecommunication service providers. BT in UK offer this service. When a call is in progress on a telephone line it is possible to send a signal via that line to the equipment at the telephone exchange. The exchange will put the current call on 'hold' and provide a dialling tone so that another outgoing call may be made. When this second call has finished a signal to the exchange will disconnect the second call and re-connect the first one that was put on 'hold'.

CSL DualCom Limited
Tel: +44(0) 1895 474 474
Fax: +44(0) 1895 474 440
Email: sales@csldual.com
Website: *http://www.csldual.com*

Technical Support Desk
Tel: +44(0) 1895 474 444
Fax: +44(0) 1895 474 440
Email: support@csldual.com
Hours: 08.00 to 18.00 weekdays
09.00 to 16.00 Saturday
Radio Coverage Prediction: http://www.csldual.com/coverage