Ref:	NR/L2/TRK/061
Issue:	3
Date:	05 September 2015
Compliance date:	05 September 2015

Level 2

Pearlitic Rails

Endorsement and Authorisation

Endorsed by:

.....

Gareth Evans, Working Group Chair

Authorised by:

.....

David Godley, Chief Track & Lineside Engineer

Accepted for issue by:

.....

Mick McManus, Principal Standards & Controls Manager

This document is the property of Network Rail. It shall not be reproduced in whole or part nor disclosed to a third party without the written permission of Network Rail.
© Copyright 2015 Network Rail.

Uncontrolled copy once printed from its electronic source.

Published and Issued by Network Rail, 2nd Floor, One Eversholt Street, London, NW1 2DN.

Copyright Network Rail
Provided by IHS Markit under license with Network Rail
No reproduction or networking permitted without license from IHS

Licensee=Nexus/1121225101, User=Gooch, Keiron
Not for Resale, 07/30/2018 10:36:56 MDT

User information

This Network Rail standard contains colour-coding according to the following Red–Amber–Green classification.

Red requirements – *No variations, could stop the railway*

- **Red requirements shall** always be complied with and achieved.
- Red requirements shall be presented in a red box with the word "shall" or expressed as a direct instruction.
- Accountability for the efficacy of red requirements lies with the Professional Head/Standard Owner.
- Red requirements are monitored for compliance.
- Corrective actions shall be enforced if variations are discovered through functional checks (e.g. engineering verification visits, audit or Operations Self-Assurance).

Amber requirements – *Controlled variations, approved risk analysis and mitigation*

- **Amber requirements shall** be complied with unless variation has been approved in advance.
- Amber requirements shall be presented with an amber sidebar and with the word "shall" or expressed as a direct instruction.
- Accountability for the efficacy of these requirements lies with the Professional Head/Standard Owner, or their nominated Delegated Authority.
- Amber requirements are monitored for compliance.
- Variations **may** be permitted. Variations are approved by the Standard Owner or through existing Delegated Authority arrangements.
- Corrective actions shall be enforced if **non-approved** variations are discovered through functional checks (e.g. engineering verification visits, audit or Operations Self-Assurance).

Green – *Guidance*

- Guidance is based on good practice. Guidance represents supporting information to help achieve Red and Amber requirements.
- Guidance shall be presented with a dotted green sidebar and with the word "should" (usually in notes) or as a direct instruction.
- Guidance is **not mandatory** and is not monitored for compliance.
- Alternative solutions may be used. Alternative solutions do not need to be formally approved.
- Decisions made by a competent person to use alternative solutions should be backed up by appropriate evidence or documentation.

Copyright Network Rail
Provided by IHS Markit under license with Network Rail
No reproduction or networking permitted without license from IHS

Licensee=Nexus/1121225101, User=Gooch, Keiron
Not for Resale, 07/30/2018 10:36:56 MDT

Issue record

Issue	Date	Comments
1	Aug 1996	Supersedes GC/ES0127.
2	Aug 2002	Extension of scope to CEN60E1 and related rails.
3	Sept 2015	Requirements aligned to European standards, inclusion of R335HP grade and additional quality requirements, RAG status applied to clauses.

Compliance

This Network Rail standard is mandatory and shall be complied with by Network Rail and its contractors if applicable from 05 September 2015.

When this standard is implemented, it is permissible for all projects that have formally completed GRIP Stage 3 (Option Selection) to continue to comply with the issue of any relevant Network Rail standards current when GRIP Stage 3 was completed and not to comply with requirements contained herein, unless stipulated otherwise in the scope of this standard.

Reference documentation

BS11:2015	Specification for dimensional properties and associated tolerances of railway rails
BS EN ISO 9001:2008	Quality management systems. Requirements
BS EN 13018:2001	Non-destructive testing. Visual testing. General principles
BS EN 13674-1:2011	Railway applications - Track - Rail - Part 1: Vignole railway rails 46 kg/m and above
BS EN 13674-2:2010	Railway applications - Track - Rail - Part 2: Switch and crossing rails used in conjunction with Vignole railway rails 46 kg/m and above
BS EN 13674-3:2006	Railway applications - Track - Rail - Part 3: Check rails
BS EN ISO 14001:2004	Environmental management systems. Requirements with guidance for use
BINDT PSL/44	Vision Requirements
NR/SP/TRK/034	Requirements for Processes for Cold-expanding Fishbolt holes by the Split sleeve Method
NR/SP/TRK/050	Process for Cold-Expanding New Fishbolt Holes by the Split Sleeve Method

Disclaimer

In issuing this document for its stated purpose, Network Rail makes no warranties, express or implied, that compliance with all or any documents it issues is sufficient on its own to ensure safe systems of work or operation. Users are reminded of their own duties under health and safety legislation.

--`,,`,`,`,,`,`,`,,`,,`,`,,`-`-`,,`,,`,`,,`---
Copyright Network Rail
Provided by IHS Markit under license with Network Rail
No reproduction or networking permitted without license from IHS
Licensee=Nexus/1121225101, User=Gooch, Keiron
Not for Resale, 07/30/2018 10:36:56 MDT

Supply

Copies of documents are available electronically, within Network Rail's organisation. Hard copies of this document may be available to Network Rail people on request to the relevant controlled publication distributor. Other organisations may obtain copies of this from an approved distributor.

Copyright Network Rail
Provided by IHS Markit under license with Network Rail
No reproduction or networking permitted without license from IHS

Licensee=Nexus/1121225101, User=Gooch, Keiron
Not for Resale, 07/30/2018 10:36:56 MDT

Contents

1 Purpose 6

2 Scope 6

3 Definitions 6

4 Rail supply qualification criteria 7

5 Acceptance tests 11

Appendix 1- Rail crown profile alignment procedure 17

Appendix 2- Through-transmission rail web ultrasonic test calibration rail artificial defects 20

Copyright Network Rail
Provided by IHS Markit under license with Network Rail
No reproduction or networking permitted without license from IHS

Licensee=Nexus/1121225101, User=Gooch, Keiron
Not for Resale, 07/30/2018 10:36:56 MDT

1 Purpose

The purpose of this product specification is to define Network Rail's requirements for the manufacture of pearlitic rails and the properties required of the rail.

2 Scope

This specification covers all pearlitic grades of rail steel and the following rail profiles: 56E1, 60E2, 95RBH, 54E1A1, 60E1A1 and 33C1.

The specification excludes the combinations (i) 54E1A1 manufactured from hypereutectoid steel and (ii) 60E1A1 manufactured from hypereutectoid steel.

The requirements of this specification shall be complied with by anyone involved in the supply, purchase, or specification of pearlitic rails.

3 Definitions

For the purposes of this standard, the following terms and definitions apply.

Term	Definition
acceptance test	Test carried out as part of the process and product control system, normally on a heat, sequence or tonnage basis.
check rail	Rail laid close to the gauge face of a running rail which does not carry a railway wheel but ensures, by guidance of the wheel, the safe passage of both wheels of the axle through small radius curves and switches and crossings by not allowing the flange of either wheel to ride up over the running surface of the running rails.
heat	Liquid steel melt tapped out of a converter or electric arc furnace which includes after continuous casting a given number of blooms relating to the weight of the heat and the extension of the mixing zone. In the case of sequence casting the blooms belonging to the mixing zone should be clearly defined.
heat treated rail	Rail that has undergone accelerated cooling from austenising temperature during the metallurgical transformation period.
hypereutectoid rail	Alloyed premium rail steel with greater than 0.83 weight % carbon, for example R335HP rail.
isothermal treatment process	Process whereby blooms are held for a period of time at an elevated temperature for diminishing the hydrogen content. Note 1: For maximum efficiency this is as near to (but below) the pearlite to austenite transformation temperature as is practically possible. Note 2: This process is sometimes referred to as sub-critical diffusion annealing.
pearlitic rail	Rail with a microstructure comprising of alternating laths of relatively soft ferrite and hard, brittle cementite (iron carbide), giving a balance between material toughness and wear resistance.
premium rail	Heat treated and / or alloyed rail steel with enhanced resistance to wear and fatigue compared to grade R260 rail steel, for example R370CrHT or hypereutectoid (R335HP) rail.

Copyright Network Rail
Provided by IHS Markit under license with Network Rail
No reproduction or networking permitted without license from IHS
Licensee=Nexus/1121225101, User=Gooch, Keiron
Not for Resale, 07/30/2018 10:36:56 MDT

Term	Definition
qualifying test	Special tests and criteria which are relevant to some aspects of the service performance of rails. Acceptance tests also form part of the qualifying tests.
R335HP	As-rolled (not heat-treated) hypereutectoid rail steel grade also known as HP rail.
running surface	Curved surface of the rail head. Area between both gauge corners (transition points of the head inclination and the first head radius).
re-heated rail	Rolled rail that has undergone re-austenisation for heat treatment purposes.
running rail	Profile that is designed to carry a railway wheel.
sequence	Any number of heats, of the same steel grade, which undergo continuous casting in tundishes. Tundishes may be used in parallel if the caster has many strands.

4 Rail supply qualification criteria

Qualification for rail supply will follow Network Rail's product acceptance process. The qualification criteria detailed in this standard form the minimum engineering acceptance requirements for rail supply. The output from a successful qualification process is a supplier-specific product acceptance certificate for the rail grades and sections for which qualification is requested.

4.1 Quality assurance and audit

The rail manufacturer shall operate an independently approved and audited quality management system conforming to the requirements of BS EN ISO 9001.

The rail manufacturer shall operate an independently approved and audited environmental management system conforming to the requirements of BS EN ISO 14001.

Representatives of Network Rail will undertake supplier qualification quality and environmental audits as determined by the Network Rail Supplier Quality Assurance procedure.

4.2 Rail manufacturing process

4.2.1 Process description

The manufacturer shall submit to Network Rail a description of (i) the processes used to manufacture rails from blooms and (ii) the quality management system and process and product control measures used to demonstrate compliance with this standard. Specifically, the following items shall be documented:

- The primary and secondary steelmaking process, including hydrogen control measures;
- The continuous casting process;
- The bloom slow-cooling or isothermal treatment processes used to control product hydrogen levels;

Copyright Network Rail
Provided by IHS Markit under license with Network Rail
No reproduction or networking permitted without license from IHS

Licensee=Nexus/1121225101, User=Gooch, Keiron
Not for Resale, 07/30/2018 10:36:56 MDT

- Measures to control of decarburisation during bloom re-heating and the maximum depth of the decarburised layer on the finished rail;
- Bloom re-heating and interpass rolling temperatures;
- Rolling mill de-scaling measures;
- The bloom reduction ratio;
- The method and form of rail identification;
- Controls during mechanical straightening of rails;
- Heat treatment processes and controls (where applicable);
- Ultrasonic testing equipment description and calibration;
- The methods of inspection for surface imperfections;
- The methods of assessment of straightness and flatness;
- The methods for cutting rail to length and rail length measurement;
- The methods of verifying that rail profile, length and fishbolt hole size and position are within the specified tolerances, including the accuracy and repeatability of measurement equipment;
- The methods for achieving fishbolt hole expansion;
- The method of rail end and bolt hole deburring.

4.2.2 Identification of rails

Rail identification shall meet the requirements of BS EN 13674-1 (running rails), BS EN 13674-2 (switch rails) and BS EN 13674-3 (check rails) with the following additional requirements.

4.2.2.1 Branding

Branding marks for rail grade and profile designations shall be as given in Table 1 and Table 2 below.

The rail branding may also include the EN steel grade branding designation.

Rail profile	Branding	Previous profile designation
95RBH	95RBH	
56E1	56E1	BR113A
60E2	60E2	
54E1A1	54E1A1	UIC54B
60E1A1	60E1A1	UIC60B
33C1	33C1	U69 or UIC33

Table 1. Rail profile branding marks.

Rail grade	Branding
R220	220
R260	No Network Rail branding mark required
R335HP	HP
R350HT	350HT
R350LHT	350LHT
R370CrHT	MHH
R400HT	400HT

Table 2. Rail grade branding marks.

Copyright Network Rail
Provided by IHS Markit under license with Network Rail
No reproduction or networking permitted without license from IHS

Licensee=Nexus/1121225101, User=Gooch, Keiron
Not for Resale, 07/30/2018 10:36:56 MDT

Examples of branding:

ROLLING MILL HP 12 60E2

ROLLING MILL MHH 12 56E1

4.2.2.2 Hot stamping

For vignole rails, each rail shall be hot stamped on the centre of the non-branded side of the web, at least once every 5m.

For switch rails, each rail shall be hot stamped at the centre of the web, at least once every 5m. Where the stamping is on the branded side of the web it must not overlay the branded characters.

4.2.2.3 Cold stamping

Cold stamping identities onto the rail web is not permitted.

Network Rail must grant specific approval for other forms of cold marking to correct rail identities.

4.2.3 Rail surface inspection

4.2.3.1 Method of test

The minimum requirement for rail surface inspection is:

- For all rail profiles with the exception of 95RBH, automatic examination of the underside and edges of the rail foot and the crown and shoulder area of the rail head of every rail along the full rail length. The recorded automatic system output shall be a function of crack length and depth.
- Visual inspection on all faces along the full rail length of every rail for surface imperfections.
- A minimum light level in the inspection area of 500lux (BS EN 13018).

4.2.3.2 Verification of testing systems

The vision of all staff carrying out manual visual examination shall be checked annually according the requirements of the British Institute of Non-Destructive Testing (BINDT) procedure PSL/44 (Vision Requirements). Vision shall be corrected accordingly following the completion of annual checks.

The capability of automatic systems to detect both transverse and longitudinal defects in the head and foot at normal operating speed shall be verified at least once for every 200 rails inspected. Systems shall be verified using a rail containing artificial defects as shown below (Figure 1 and Table 3) or comparable defects. Unless stated otherwise the defects shall be in the form of an arc and not more than 0.3mm wide, see Figure 1.

Copyright Network Rail
Provided by IHS Markit under license with Network Rail
No reproduction or networking permitted without license from IHS

Licensee=Nexus/1121225101, User=Gooch, Keiron
Not for Resale, 07/30/2018 10:36:56 MDT

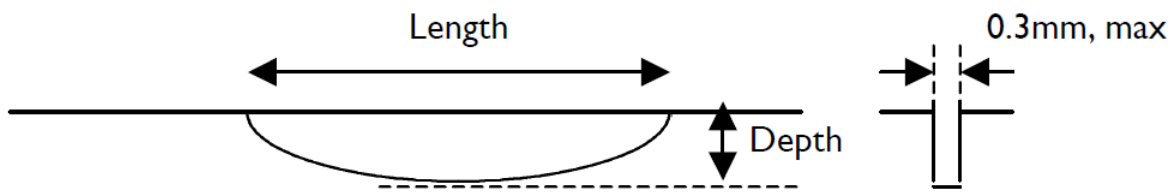

Figure 1. Form of artificial defects used to verify automated surface inspection systems. For dimensions, locations and orientations see Table 3.

Manual non-destructive systems used to confirm the depth of defects, other than mechanical gauges, shall be verified prior to use using a calibration block containing defects 0.3, 0.4 and 0.5mm deep which extend across the full width of the calibration block surface.

Location	Orientation	Depth (mm)	Length (mm)
Rail foot centreline	Longitudinal	0.5	20
	Transverse	0.5	20
	Longitudinal	1.5	10
	Transverse	1.5	10
Rail foot outer area: defects to be centred 30 – 40mm from the rail centreline on both sides of the foot.	Longitudinal	0.5	20
	Transverse	0.5	20
	Longitudinal	1.5	10
	Transverse	1.5	10
Rail foot edge: defects to extend up the full height of the foot edge on both sides	Transverse	0.5	
Rail head centreline	Longitudinal	0.5	20
	Transverse	0.5	20
	Longitudinal	1.5	10
	Transverse	1.5	10
Rail head: defects to be centred 15mm on both sides of the rail centreline	Longitudinal	0.5	20
	Transverse	0.5	20
	Longitudinal	1.5	10
	Transverse	1.5	10

Table 3. Dimensions, locations and orientations of artificial defects used to verify automated surface inspection systems.

Copyright Network Rail
Provided by IHS Markit under license with Network Rail
No reproduction or networking permitted without license from IHS

Licensee=Nexus/1121225101, User=Gooch, Keiron
Not for Resale, 07/30/2018 10:36:56 MDT

4.2.4 Cold expansion of fishbolt holes

Following drilling, fishbolt holes shall be cold expanded in accordance with the requirements of NR/SP/TRK/050 or NR/SP/TRK/034 and approved by Network Rail.

4.3 Product qualifying tests - steel grades and rail profiles included in BS EN 13674-1, -2 and -3 and BS11

Qualifying tests for rail supply shall be carried out according to BS EN 13674-1 Clause 8. Qualifying tests shall be carried out on 60E2 rail section or the heaviest section produced, for each steel grade to be supplied, with the following additional requirement:

- For rail foot residual stress testing, three samples shall be taken from each of two finished 108m rails (six samples in total), with sample locations in each rail as follows:

  - One sample taken from 3m-5m of each finished rail end.
  - One sample taken from the middle of the rail (>20m from the finished rail ends).

Sulfur print qualification tests are not required.

4.4 Product qualifying tests – hypereutectoid steel grade R335HP not included in BS EN 13674-1, -2 and -3

Qualifying tests for rail supply shall be carried out as described in clause 4.3.

The fracture toughness of R335HP rail steel shall conform to the requirements of Table 4.

Steel Grade	Mean value of K_{IC}, $MPam^{1/2}$	Lowest value of K_{IC}, $MPam^{1/2}$
R335HP	31	27

Table 4. Fracture toughness limits for R335HP steel.

5 Acceptance tests

5.1 Quality assurance and audit

The rail manufacturer shall make available a Certificate of Conformity for rail rolled from each steelmaking heat.

Every 6 months or 25,000 tonnes of rail delivered to Network Rail (whichever equates to the greater volume of rail manufactured), the rail manufacturer shall provide a process capability report highlighting the statistical distribution of and trends in the results from acceptance tests.

Representatives of Network Rail will carry out regular supplier quality and environmental audits at the frequency determined by the Network Rail Supplier Quality Assurance procedure.

Copyright Network Rail
Provided by IHS Markit under license with Network Rail
No reproduction or networking permitted without license from IHS

Licensee=Nexus/1121225101, User=Gooch, Keiron
Not for Resale, 07/30/2018 10:36:56 MDT

5.2 Acceptance tests - steel grades and rail profiles included in BS EN 13674-1, -2 and -3 and BS11

5.2.1 56E1, 60E2 and 95RBH running rails

The acceptance testing requirements of BS EN 13674-1 Clause 9 for profile class X and straightness class A shall be met for rail profiles 56E1 and 60E2 as well as the additional requirements stated in clause 5.2.4 of this standard.

The acceptance testing requirements of BS EN 13674-1 Clause 9 shall be met for rail profile 95RBH, with the following exceptions:
- straightness and profile which shall comply with the requirements of BS11;
- the additional requirements of clause 5.2.4 of this standard.

5.2.2 54E1A1 and 60E1A1 switch rails

The acceptance testing requirements of BS EN 13674-2 Clause 9 shall be met for rail profiles 54E1A1 and 60E1A1 as well as the additional requirements stated in clause 5.2.4 of this standard.

5.2.3 33C1 check rails

The acceptance testing requirements of BS EN 13674-3 Clause 8 shall be met for rail profile 33C1.

5.2.4 Additional requirements for steel grades and rail profiles included in BS EN 13674-1 and -2 and BS11

5.2.4.1 Rail drilling

Fishbolt holes shall be centred within 0.5mm of their nominal position relative to both the rail foot and the rail end.

The tolerances on as-drilled fishbolt hole size are shown in Table 5.

Nominal hole size (mm)	Drilling tolerance (mm)
30	+0.2/-0
30.2	+0.2/-0

Table 5. Fishbolt hole size drilling tolerances.

5.2.4.2 Rail ends

Rail ends shall be deburred to remove all sharp edges.

5.2.4.3 Rail crown profile tolerances

In addition to the requirements of BS EN 13674 and BS11, rail manufacturers shall measure and record the rail crown profile.

The method and frequency of measurement shall be proposed by rail manufacturers during the rail supply qualification process, and agreed by Network Rail.

The method of aligning crown profile data shall follow the procedure described in Appendix 1.

Copyright Network Rail
Provided by IHS Markit under license with Network Rail
No reproduction or networking permitted without license from IHS

Licensee=Nexus/1121225101, User=Gooch, Keiron
Not for Resale, 07/30/2018 10:36:56 MDT

All measured profiles shall lie within the tolerance band of nominal crown profile +0.6mm -0.3mm between the locations defined in Appendix 1.

5.2.4.4 Rail surface quality

In addition to the requirements of BS EN 13674, the following requirements shall be met:

- The maximum permissible continuous width of flat on the side of the rail head or along the edge of the rail foot, caused during transfer of rail between hot rolling manufacturing processes, is
  - Side of head: 7mm
  - Edge of foot: 5mm

  providing the roller flat is not associated with surface protrusions along the edge of the flat. If so, the length of rail affected shall be rejected.
- For steel grades with a minimum hardness > 300HBW, cyclical running surface irregularities that result in accelerated in-service rail and track degradation are not permitted. Note that cyclic longitudinal surface deviations as shallow as 0.25mm have been shown to cause accelerated track degradation.
- Hand grinding to correct rail profile defects such as roller table side-of-head and edge-of-foot flats is not permitted.

5.2.4.5 Rail internal quality

Sulfur print acceptance testing is not required by Network Rail.

5.2.4.6 Rail foot residual stress (vignole rails only)

In addition to residual stress qualifying tests, rail manufacturers shall carry out one set of measurements per steel grade every 6 months on the heaviest rail section supplied to Network Rail, on a rail selected at random from those supplied during the previous 6-month period. Three samples shall be taken from one 108m rail, with sample locations in each rail as follows:

- One sample taken from within 3m-5m of each finished rail end;
- One sample taken from the middle of the rail (>20m from the finished rail ends).

Residual stress shall be measured as per BS EN 13674-1 Clause 8.5.

The maximum longitudinal residual stress in the rail foot shall be 250MPa for all steel grades and rail sections.

5.2.4.7 Through transmission ultrasonic testing of the rail web

The purpose of this test is to identify rail web defects created during roller straightening.

The back wall echo from the 0º rail crown or rail foot ultrasonic probe shall be continuously monitored. Back wall signals reduced by 6dB or greater over a minimum 50mm length of rail tested shall be marked for further investigation.

Copyright Network Rail
Provided by IHS Markit under license with Network Rail
No reproduction or networking permitted without license from IHS

Licensee=Nexus/1121225101, User=Gooch, Keiron
Not for Resale, 07/30/2018 10:36:56 MDT

The system shall be capable of identifying the artificial defects machined into a calibration rail as shown in Appendix 2. These defects shall be added to the standard calibration rail design defined in EN 13674-1.

5.3 Product acceptance tests – hypereutectoid steel grade R335HP not included in BS EN 13674-1, and -3

Acceptance testing requirements for the supply of R335HP steel grade are shown in Table 6.

5.3.1 56E1, 60E2 and 95RBH running rails

The acceptance testing requirements of BS EN 13674-1 Clause 9 for profile class X and straightness class A, and the requirements of clause 5.3.2, shall be met for rail profiles 56E1 and 60E2.

The acceptance testing requirements of BS EN 13674-1 Clause 9, and the requirements of clause 5.3.2, shall be met for rail profile 95RBH, with the following exceptions:
- straightness and profile which shall comply with the requirements of BS11.

5.3.2 Additional requirements for R335HP steel grade

The criteria for rail drilling, rail ends, rail straightness, rail crown profile, surface quality, internal quality and residual stress in clauses 5.2.4.1 to 5.2.4.7 shall be met for rail manufactured from R335HP steel grade. Further requirements for this grade are described below.

5.3.2.1 Chemical composition

The chemical composition shall conform to the requirements of Table 7 and Table 8.

5.3.2.2 Tensile properties

The tensile properties of R335HP rail steel shall conform to the requirements of Table 7.

5.3.2.3 Hardness

The running surface hardness of R335HP rail steel shall be within the range 335-375 HBW.

5.3.2.4 Microstructure

The rail head microstructure of R335HP rail steel, as assessed at the EN13674-1 standard test positions, shall be fully pearlitic with no martensite, bainite or grain boundary cementite.

Copyright Network Rail
Provided by IHS Markit under license with Network Rail
No reproduction or networking permitted without license from IHS

Licensee=Nexus/1121225101, User=Gooch, Keiron
Not for Resale, 07/30/2018 10:36:56 MDT

Product / Process Attribute	**Network Rail Requirement – R335HP Steel Grade**	
	56E1, 60E2	**95RBH**
Acceptance test procedure / frequency of tests	BS EN 13674-1 Clause 9 and NR/SP/TRK/061 Clause 5.3.2 Hardness to be tested according to the requirements of EN 13674-1 Table 4 for grade R260 rail	
Acceptance test results		
Chemical composition	NR/SP/TRK/061 Clause 5.3.2.1	
Hydrogen content	NR/SP/TRK/061 Clause 5.3.2.1	
Oxygen content	NR/SP/TRK/061 Clause 5.3.2.1	
Microstructure	NR/SP/TRK/061 Clause 5.3.2.4	
Decarburisation	BS EN 13674-1 Clause 9.1.5	
Oxide cleanness	BS EN 13674-1 Clause 9.1.6	
Sulfur prints	Not required	
Hardness	NR/SP/TRK/061 Clause 5.3.2.3	
Tensile test properties	NR/SP/TRK/061 Clause 5.3.2.2	
Rail foot residual stress	NR/SP/TRK/061 Clause 5.2.4.6	
Dimensional tolerances	BS EN 13674-1 Clause 9.2 and 9.3, and NR/SP/TRK/061 Clause 5.2.4.1, 5.2.4.3 and 5.2.4.4	BS11 and NR/SP/TRK/061 Clause 5.2.4.1, 5.2.4.3 and 5.2.4.4
Internal quality	BS EN 13674-1 Clause 9.4.1 NR/SP/TRK/061 Clause 5.2.4.7	
Surface quality	BS EN 13674-1 Clause 9.4.2.1 and 9.4.2.3 NR/SP/TRK/061 Clause 4.2.3, 5.2.4.2 and 5.2.4.4	

Table 6. Summary of R335HP specification requirements.

Copyright Network Rail
Provided by IHS Markit under license with Network Rail
No reproduction or networking permitted without license from IHS

Licensee=Nexus/1121225101, User=Gooch, Keiron
Not for Resale, 07/30/2018 10:36:56 MDT

Steel grade		**% by mass**									**10-4% (ppm) by mass; maximum**		**Minimum tensile strength MPa**	**Minimum elongation %**
Steel grade	Sample	C	Si	Mn	P max.	S	Cr max.	Al max.	V	N max.	O	H		
R335HP	Liquid	0.88 - 0.95	0.77 - 0.95	0.80 - 0.95	0.025	0.008 - 0.020	0.10	0.004	0.05 - 0.14	0.007	20	2.5		
	Solid	0.86 - 0.97	0.75 – 0.97	0.75 – 1.00	0.030	0.008 - 0.025	0.10	0.004	0.05 - 0.14	0.008	20	2.5	1150	7

Table 7. Chemical composition, tensile property and hardness limits for R335HP steel.

Steel grade	**Maximum % by mass**								
	Mo	Ni	Cu	Sn	Sb	Nb	Ti	Cu+10Sn	Cr+Mo+Ni+Cu
R335HP	0.020	0.10	0.15	0.030	0.020	0.040	0.025	0.35	0.22

Table 8. Residual elements chemical composition limits for R335HP steel.

Copyright Network Rail
Provided by IHS Markit under license with Network Rail
No reproduction or networking permitted without license from IHS

Licensee=Nexus/1121225101, User=Gooch, Keiron
Not for Resale, 07/30/2018 10:36:56 MDT

Appendix 1- Rail crown profile alignment procedure

Rail crown profile data collected as per section 5.2.4.3 of this standard shall be compared to nominal (design) crown profile dimensions using the following procedure.

A1.1 Vignole rails and 95RBH section

Select the correct nominal (design) crown profile reference data and the gauge corner and crown radius transition points defined in Table 9.

Rail profile	Dimension in mm			
	A	B	b	b'
95RBH	69.85	46.383	13.5	12.7
56E1	69.85	51.23	14.53	11.61
60E2	72.00	48.91	14.30	12.04

Table 9. Rail crown transition reference point measurements for vignole rails and 95RBH section.

Using position Y (centreline of the rail crown) in Figure A1.1 as the datum point, the rail crown transition points are defined as:

- crown radius transition point co-ordinates
  - Z = (B/2, -(b-b'))
  - Z' = (-B/2, -(b-b'))
- gauge corner transition point co-ordinates
  - X = (A/2, -b)
  - X' = (-A/2, -b)

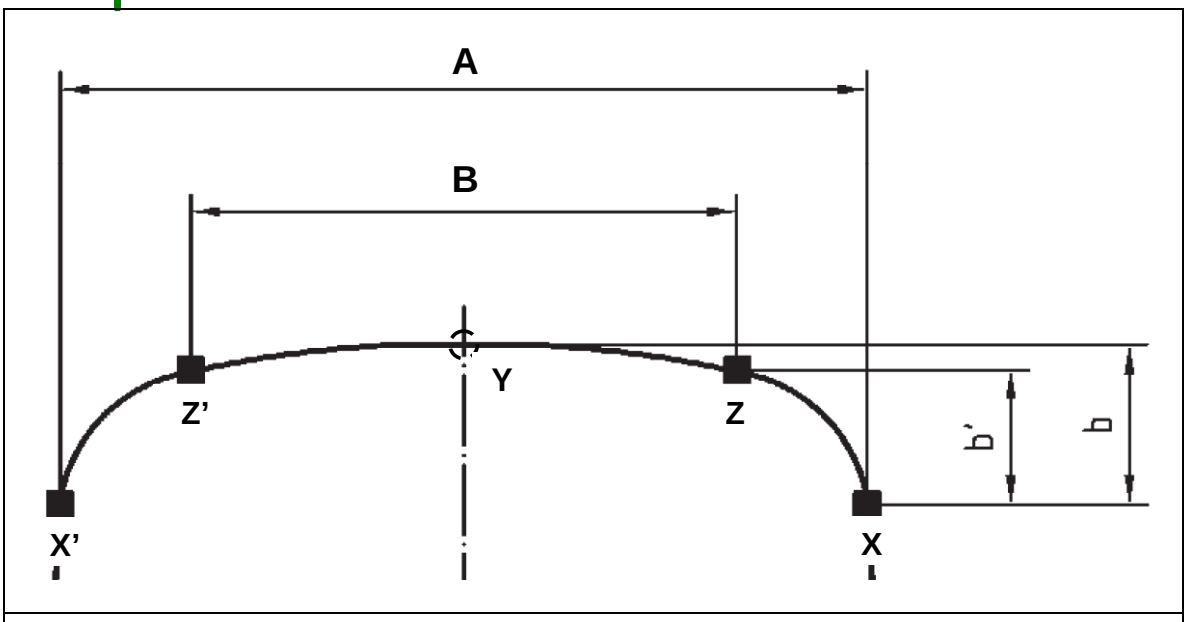

Figure A1.1. Locations of rail crown transition points.

Copyright Network Rail
Provided by IHS Markit under license with Network Rail
No reproduction or networking permitted without license from IHS
Licensee=Nexus/1121225101, User=Gooch, Keiron
Not for Resale, 07/30/2018 10:36:56 MDT

Align measured profile data with gauge corner transition point X, as shown in Figure A1.2.

Measured profiles shall fit within the crown profile tolerance profile of:

- Nominal +0.6m -0.3mm

between gauge corner transition point X and crown centreline Y defined in Figure A1.1. Figure A1.2 defines the profile tolerance bands.

Reverse the measured crown profile (by flipping about the vertical axis) and repeat the process to align and compare measured data to crown profile tolerances.

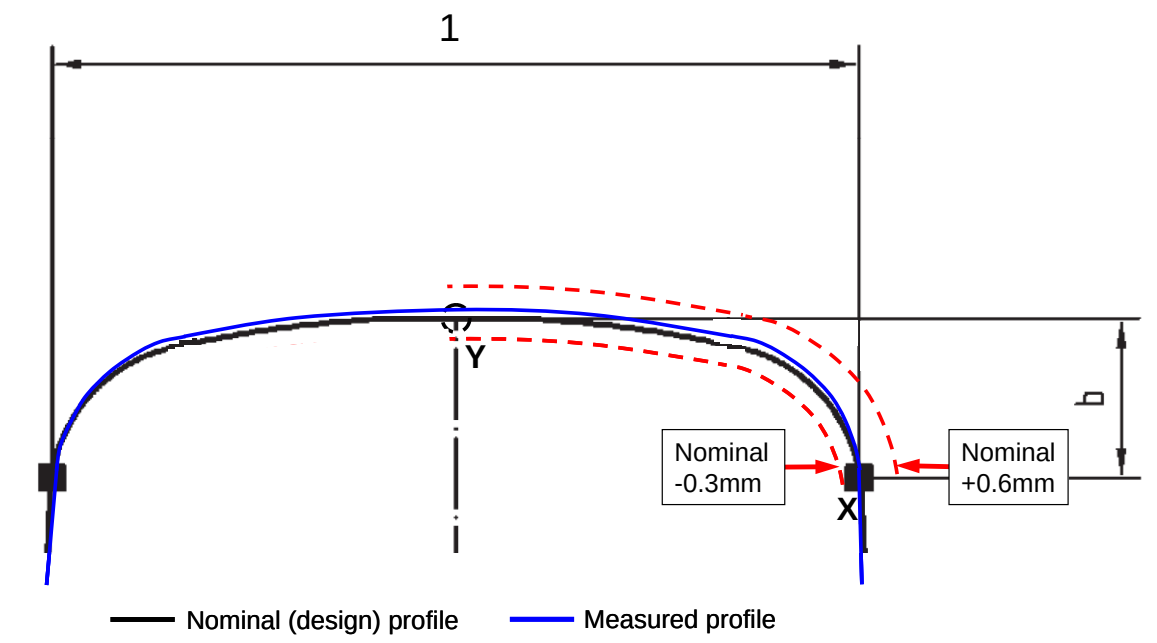

Figure A1.2. Method of aligning crown profile data for vignole rails and 95RBH section. Align measured data at position X on the nominal (design) profile. Measured data to fit within tolerance band of nominal profile +0.6mm -0.3mm between points X and Y.

A1.2 Switch and crossing rails

Select the correct nominal crown profile reference data and the gauge corner and crown radius transition points defined in Table 10 (extracted from Annex A of BS EN 13674-2).

Rail profile	**Dimension in mm**			
	A	**B**	**b**	**b'**
54E1A1	70.00	49.73	14.10	12.04
60E1A1	72.00	52.05	14.30	12.00

Table 10. Rail crown transition reference point measurements for switch rails.

Using position Y (centreline of the rail crown) in Figure A1.3 as the datum point, the rail crown transition points are defined as:

Copyright Network Rail
Provided by IHS Markit under license with Network Rail
No reproduction or networking permitted without license from IHS

Licensee=Nexus/1121225101, User=Gooch, Keiron
Not for Resale, 07/30/2018 10:36:56 MDT

- crown radius transition point co-ordinates
  - Z = (B/2, -(b-b'))
  - Z' = (-B/2, -(b-b'))
- gauge corner transition point co-ordinates
  - X = (A/2, -b)
  - X' = (-A/2, -b)

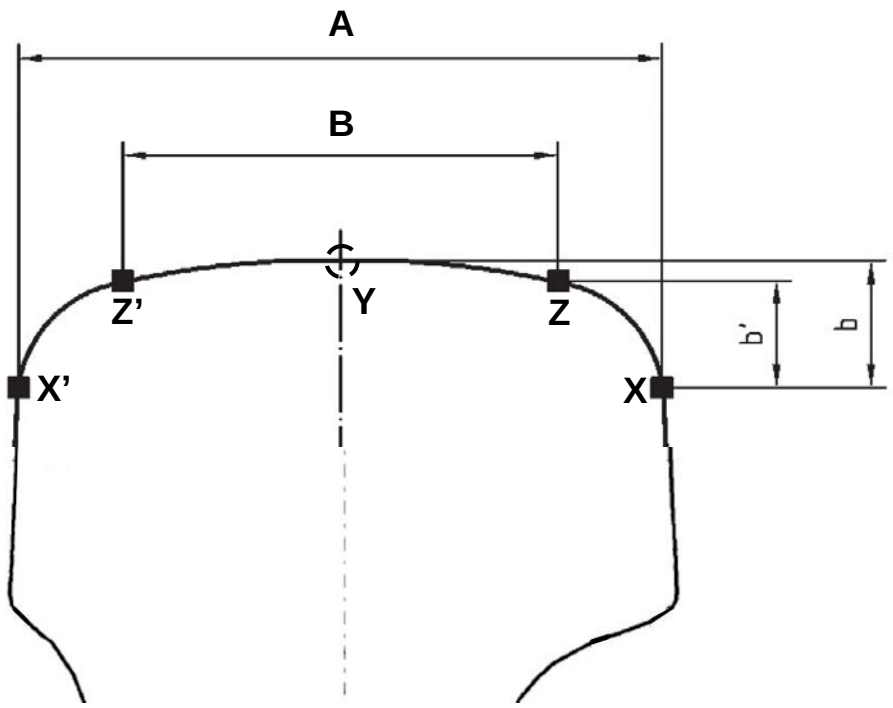

Figure A1.3. Locations of switch and crossing rail crown transition points to be used for crown profile comparison.

Align measured profile data with gauge corner transition point X defined in Figure A1.3.

Measured profiles shall fit within the crown profile tolerance profile of:

- Nominal +0.6mm -0.3mm

between gauge corner transition point X and crown radius transition point Z'.

Copyright Network Rail
Provided by IHS Markit under license with Network Rail
No reproduction or networking permitted without license from IHS

Licensee=Nexus/1121225101, User=Gooch, Keiron
Not for Resale, 07/30/2018 10:36:56 MDT

Appendix 2- Through-transmission rail web ultrasonic test calibration rail artificial defects

A2.1 56E1 rail section

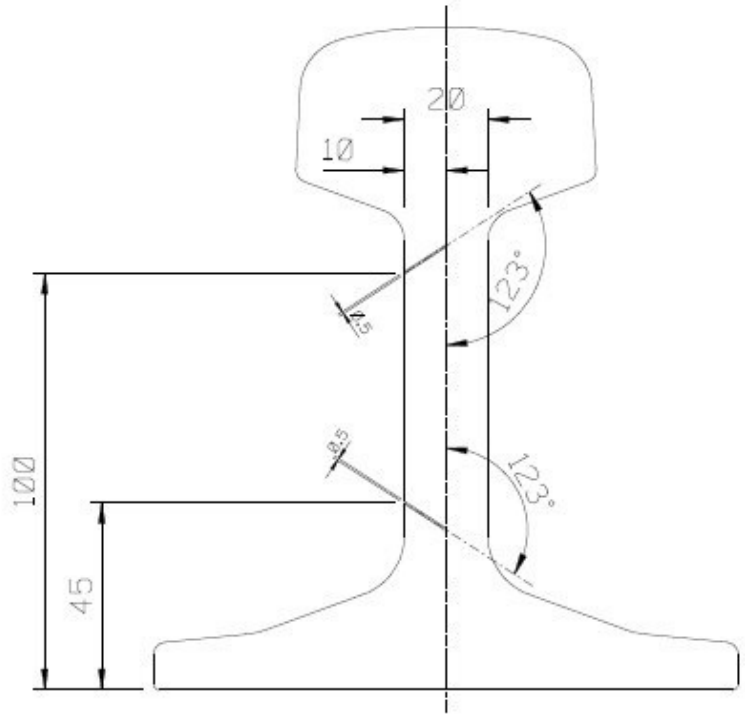

a) 56E1 artificial web defect set 1

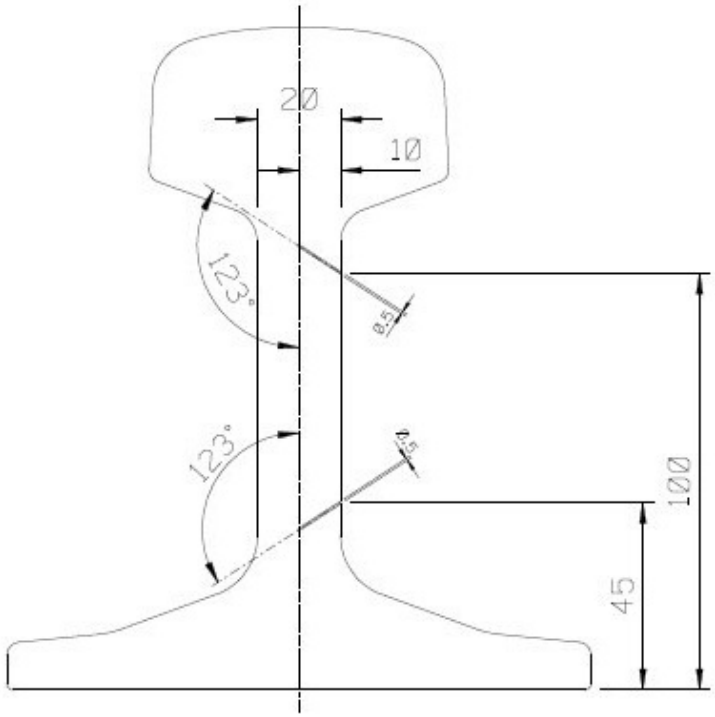

b) 56E1 artificial web defect set 2

Copyright Network Rail
Provided by IHS Markit under license with Network Rail
No reproduction or networking permitted without license from IHS

Licensee=Nexus/1121225101, User=Gooch, Keiron
Not for Resale, 07/30/2018 10:36:56 MDT

A2.2 60E2 rail section

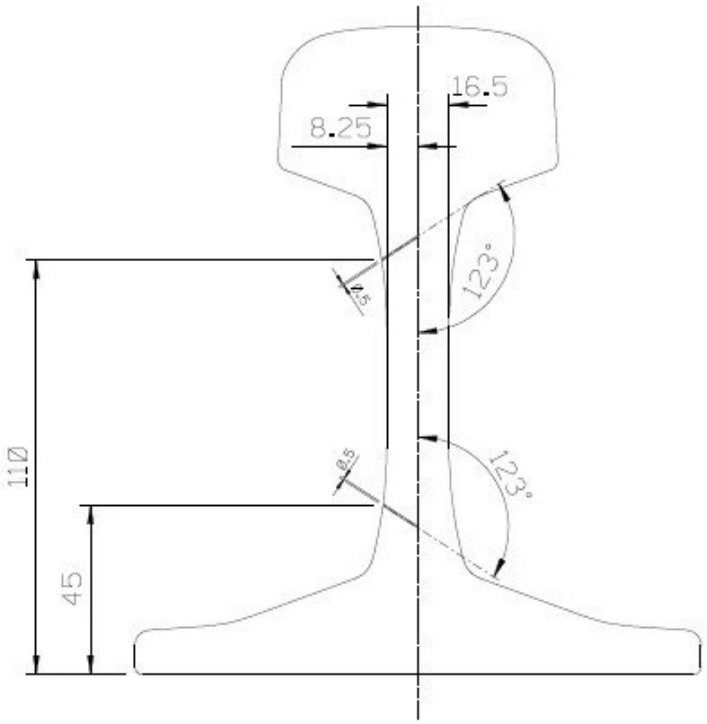

a) 60E2 artificial web defect set 1

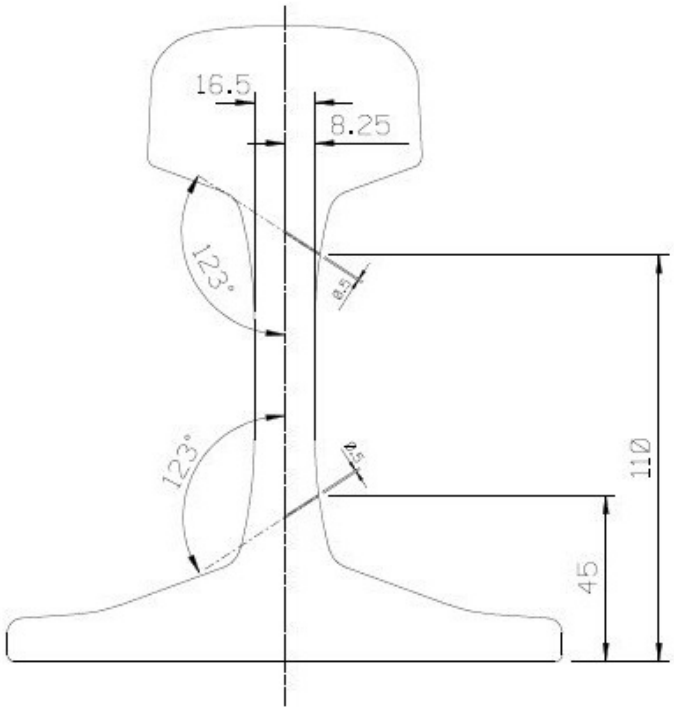

b) 60E2 artificial web defect set 2

Copyright Network Rail
Provided by IHS Markit under license with Network Rail
No reproduction or networking permitted without license from IHS

Licensee=Nexus/1121225101, User=Gooch, Keiron
Not for Resale, 07/30/2018 10:36:56 MDT

Standards Briefing Note

Ref: NR/L2/TRK/061	**Issue:** 3
Title: Pearlitic Rail	
Publication Date: 05/09/2015	**Compliance Date:** 05/09/2015
Standard Owner: Chief Track & Lineside Engineer	
Non-Compliance rep (NRNC): N/A	
Further information contact: Gareth Evans	**Tel:** 07515 627926

Purpose:
The purpose of this product specification is to define Network Rail's requirements for the manufacture of pearlitic rails and the properties required of the rail.

Scope:
This specification covers all pearlitic grades of rail steel and the following rail profiles: 56E1, 60E2, 95RBH, 54E1A1, 60E1A1 and 33C1.

The specification excludes the combinations (i) 54E1A1 manufactured from hypereutectoid steel and (ii) 60E1A1 manufactured from hypereutectoid steel.

The requirements of this specification shall be complied with by anyone involved in the supply, purchase, or specification of pearlitic rails.

What's New/ What's Changed and Why:

1. Rail manufacturing specifications have been aligned with European standard requirements.
2. Requirements for all premium rail grades purchased by Network Rail have been added.
3. Additional requirements have been included to prevent the reoccurrence of rail quality issues experienced in the last 6 years.
4. The standard has been RAG'd.

Affected documents:

Reference	*Impact*
NR/L2/TRK/061 ISSUE 2	Superseded

Briefing requirements: *Where Technical briefing (T) is required, the specific Post title is indicated. These posts have specific responsibilities within this standard and receive briefing as part of the Implementation Programme. For Awareness briefing (A) the Post title is not mandatory.*

Please see http://ccms2.hiav.networkrail.co.uk/webtop/drl/objectId/09013b5b804504da for guidance.

Briefing *(A-Awareness/ T-Technical)*	**Post**	**Team**	**Function**
A	Chief Track & Lineside Engineer	STE Track & Lineside	STE
A	Head of Track	STE Track & Lineside	STE
A	Head of S&C	STE S&C	STE
A	Director of Materials & Logistics	Materials & Logistics	NSC
A	Business Manager [S&C, Rail]	Materials & Logistics	NSC
A	Route Asset Manager (Track)	Route	Network Operations
A	Senior Asset Engineer (Track)	Route	Network Operations
A	Discipline Manager	Track	Infrastructure Projects
A	Works Delivery Manager	Route	Network Operations
A	Track Maintenance Engineer	Route	Network Operations

**NOTE: Contractors are responsible for arranging and undertaking their own Technical and Awareness Briefings in accordance with their own processes and procedure*

Copyright Network Rail
Provided by IHS Markit under license with Network Rail
No reproduction or networking permitted without license from IHS

Licensee=Nexus/1121225101, User=Gooch, Keiron
Not for Resale, 07/30/2018 10:36:56 MDT