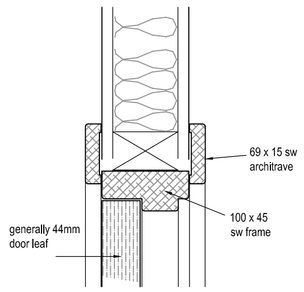

Typical Partition Door Head Detail

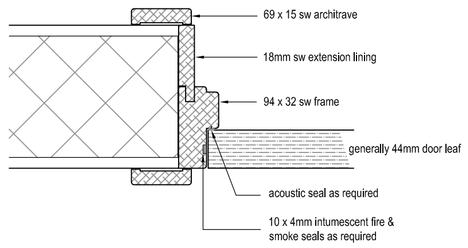

Typical Masonry Door Jamb Detail

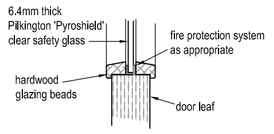

Door Glazing Detail

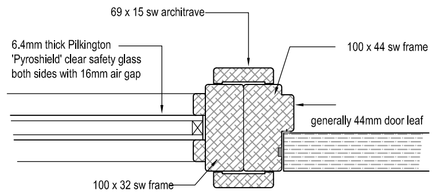

Typical Door/Screen Jamb Detail

NEW INTERNAL DOOR AND IRONMONGERY SCHEDULE

DOOR REF	LOCATION / ROOM NUMBER	DOOR LEAVES	DOOR SIZE	HINGES	FIRE RATING	ELEVATION TYPE	CLOSER	LOCK	HANDLE	PUSH PLATE/S	KICK PLATE/S	DOOR HOLD	Flush BOLT and socket	DOOR STOP	FINGER GUARD	DOOR SIGN Fire Door-Keep Shut	DOOR SIGN Fire Door-Keep Locked	DOOR SIGN Fire Door-Auto Keep Clear	ACCESS CONTROL
D01	corridor R03	2	926 x 2040 + t.w.o. x 2040	6	FD30S	Type A	overhead	mortice	2 x pull	2	4		2	2	2	2	2		Maglock / fob reader (2-way)
D02	Staff Change 1 R01	1	926 x 2040	3		Type B		indicator	lever		2				✓				
D03	Staff Change 2 R02	1	926 x 2040	3		Type B		indicator	lever		2			✓	✓				
D04	Wet Change 2 lob R06	1	926 x 2040	3	FD30S	Type C	overhead	mortice	pull	✓	2			✓	✓				Maglock / fob reader (1-way)
D05	Wet Change 1 lob R04	1	926 x 2040	3	FD30S	Type C	overhead	mortice	pull	✓	2			✓	✓				Maglock / fob reader (1-way)
D06	accessible toilet R05	1	926 x 2040	3		Type B		indicator	lever		2			✓	✓				
D07	accessible toilet R07	1	926 x 2040	3		Type B		indicator	lever		2			✓	✓				
D08	Wet Change 1 R04	1	926 x 2040	3	FD30S	Type C	'free-swing'	mortice	pull	✓	2	electronic		✓	✓				
D09	Wet Change 2 R06	1	926 x 2040	3	FD30S	Type C	'free-swing'	mortice	pull	✓	2	electronic		✓	✓				
D10	Pool Equipment St. R10	1	926 x 2040	3	FD30S	Type B	'free-swing'	mortice	pull	✓	2	electronic		✓	✓		2		
D11	corridor R08	2	926 x 2040 + t.w.o. x 2040	6	FD30S	Type D	overhead		2 x pull	2	4	electronic	2	2	2	2		2	
D12	Dry Change 3 R15	1	926 x 2040	3	FD30S	Type C	overhead	mortice	pull	✓	2			✓	✓				
D13	accessible toilet R16	1	926 x 2040	3		Type B		indicator	lever		2			✓	✓				
D14	Dry Change 2 R12	1	926 x 2040	3	FD30S	Type C	overhead	mortice	pull	✓	2			✓	✓				
D15	Change 1 R11	1	926 x 2040	3	FD30S	Type B		indicator	lever		2			✓	✓				
D16	accessible toilet R13	1	926 x 2040	3		Type B		indicator	lever		2			✓	✓				
D17	Hydro Pool Hall R09	1	926 x 2040	3	FD30S	Type C	overhead	mortice	pull	✓	2			✓	✓				Maglock / fob reader (1-way)
D18	Laundry R18	1	926 x 2040	3	FD30S	Type E	overhead	mortice	pull	✓	2			✓	✓	2			
D19	Entrance Lobby R19	2	926 x 2040 + t.w.o. x 2040	6	FD30S	Type D	overhead		2 x pull	2	4		2	2	2	2	2		Maglock / fob reader (1-way)
D20	Office R18	1	926 x 2040	3	FD30S	Type E	overhead	sashlock	lever		2			✓	✓				
D21	Chemical Store 1 R22	1	826 x 2040	3	FD30S	Type F	overhead	sashlock	lever		2			✓			2		
D22	Chemical Store 2 R23	1	826 x 2040	3	FD30S	Type F	overhead	sashlock	lever		2			✓			2		

Internal doorsets from Lloyd Worrall 'Interspec' range to BS 476 Part 20 1987 with Detail 21 vision panels.
Lloyd Worrall Group
Unit 2,
Tenax Road,
Trafford Park,
Manchester M17 1AZ
Tel: 0161 873 5301
E: manchester@lloydworrall.co.uk

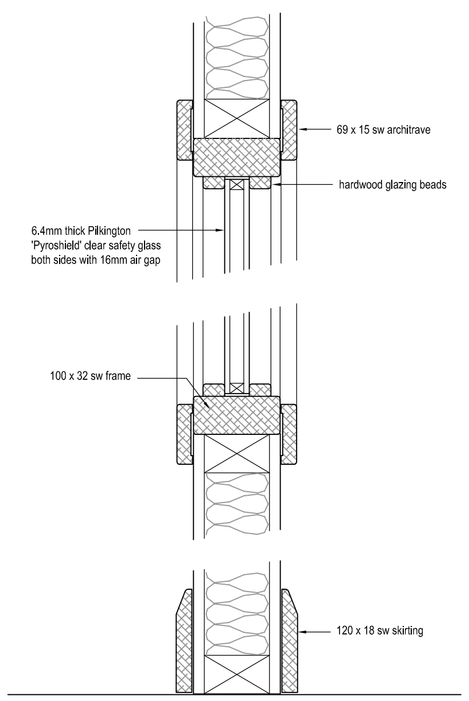

Typical Partition Wall with glazed panel

Typical Masonry Door Head Detail

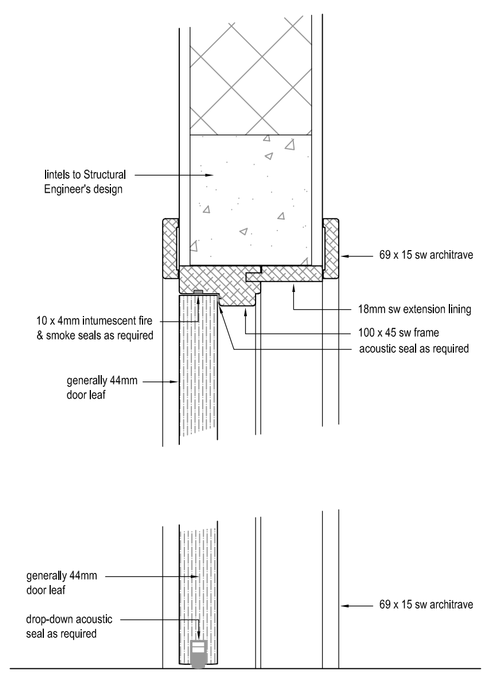

Typical Door Cill Detail

DOOR AND FRAME DETAILS

Scale 1:5 0 100 200 300mm

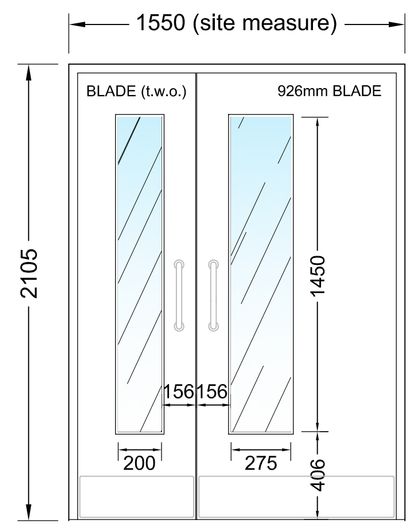

Internal Door - TYPE A
D01

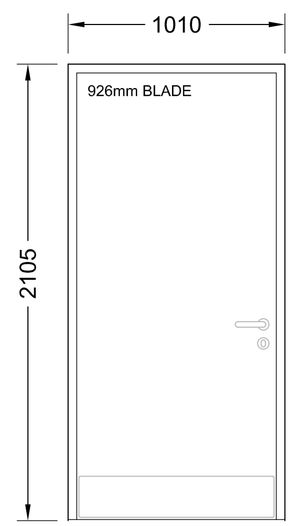

Internal Door - TYPE B
D02, 03, 06, 07, 10, 13, 15, D16

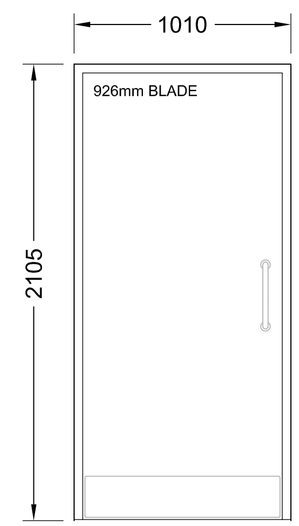

Internal Door - TYPE C
D04, 05, 08, 09, 12, 14, 17,

DOOR ELEVATION DETAILS

Scale 1:20 0 0.5 1m 1 2 3 4 6 7 8 9

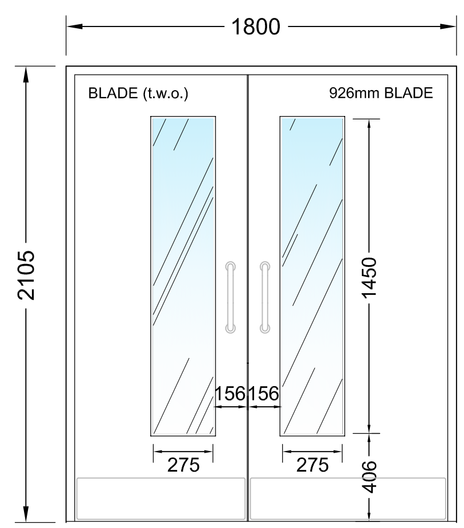

Internal Door - TYPE D
D11, 19

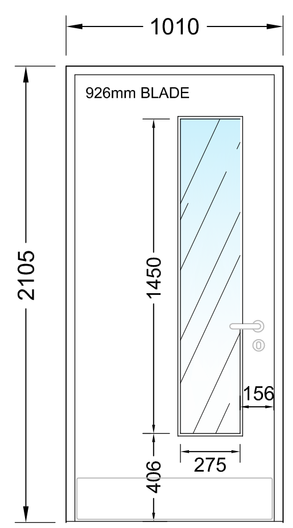

Internal Door - TYPE E
D18, 20

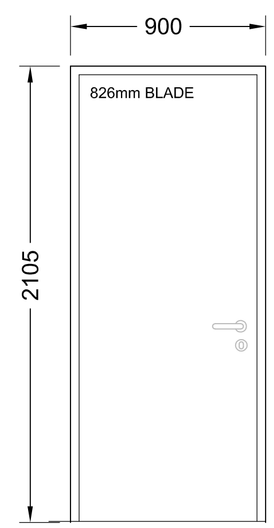

Internal Door - TYPE F
D21, 22

GENERAL NOTES

THE CONTRACTOR IS ADVISED TO VISIT THE SITE PRIOR TO TENDERING & ASCERTAIN ALL LOCAL CONDITIONS & RESTRICTIONS LIKELY TO AFFECT THE EXECUTION OF THE WORKS. NO CLAIMS ARISING FROM FAILURE TO DO SO WILL BE CONSIDERED.

THIS DRAWING IS TO BE READ IN CONJUNCTION WITH ALL OTHER DRAWINGS, SCHEDULES & SPECIFICATIONS RELATING TO THE PROJECT AND
ANY DISCREPANCIES NOTIFIED TO THE CONTRACT ADMINISTRATOR IMMEDIATELY.

THE CONTRACTOR IS TO CHECK ALL DIMENSIONS ON SITE PRIOR TO COMMENCING WORKS OR ORDERING ANY MATERIALS. DO NOT SCALE OFF DRAWINGS.

ALL WORKMANSHIP AND MATERIALS TO COMPLY WITH BUILDING REGULATIONS,BRITISH STANDARDS,CODES OF PRACTICE, MANUFACTURERS
INSTRUCTIONS,AGREMENT CERTIFICATES ETC.ALL MATERIALS SHALL BE SUITABLE FOR PURPOSE.

THE CONTRACTOR IS TO MAKE GOOD ALL WORKS DISTURBED.

THE CONTRACTOR TO COMPLY WITH CDM REGULATIONS AND HEALTH AND SAFETY REQUIREMENTS WHERE APPROPRIATE.

REV	DESCRIPTION	DATE

Tender Issue

This design/document has been prepared by Bury MBC Architectural Services. It should not, without prior permission, be used for any use other than the use originally intended.

Department For Resources & Regulation
Architectural Services
Bury COUNCIL
3 Knowsley Place,
Duke Street,
Bury, Lancs BL9 0EJ
Tel: 0161 253 6989
Fax: 0161 253 6193
Web: www.bury.gov.uk
Bury : Prestwich : Radcliffe : Ramsbottom : Tottington : Whitefield

PROJECT TITLE:
ELMS BANK SPECIALIST ARTS COLLEGE
RIPON AVENUE, WHITEFIELD. M45 8PJ
HYDROTHERAPY POOL & CHANGING

DRAWING TITLE:
INTERNAL DOORS AND IRONMONGERY SCHEDULE

DRAWN BY: NB	DATE: 1/18	ISSUE NUMBER:	
CHECKED BY: RJV	DATE: 1/18	DATE OF ISSUE:	
SCALE: as noted @ A1			

DRAWING NUMBER:
E 17301 A 11

DEPT | CODE | DRAWING REF. | REV