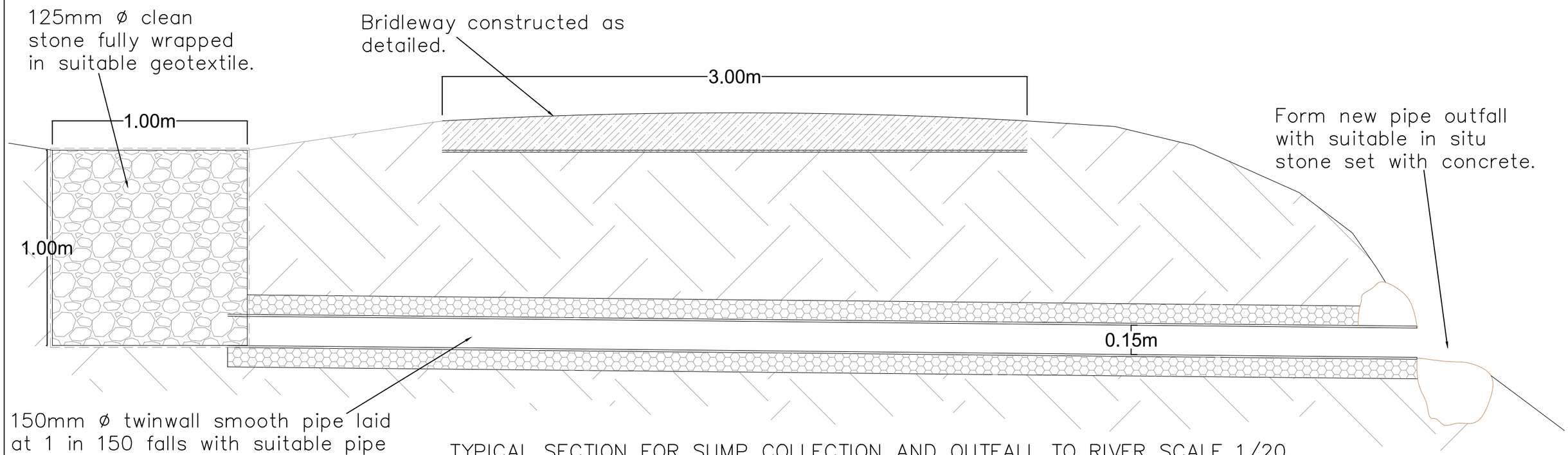

TYPICAL SECTION FOR SUMP COLLECTION AND OUTFALL TO RIVER SCALE 1/20

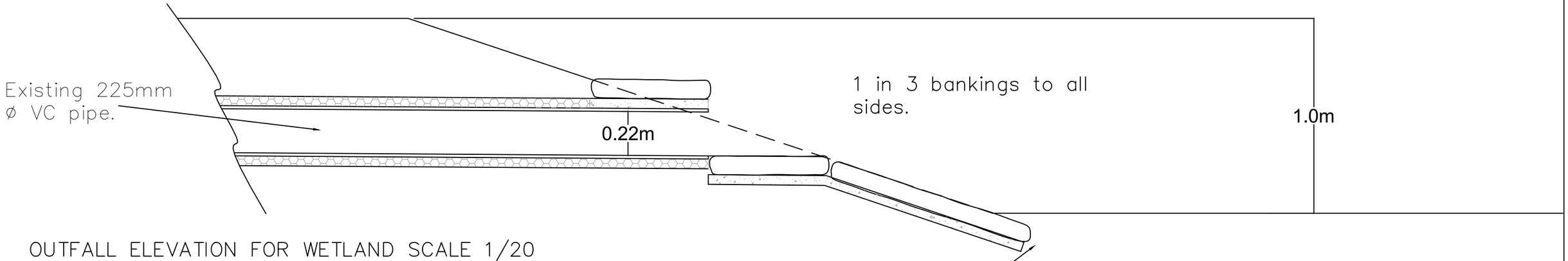

OUTFALL ELEVATION FOR WETLAND SCALE 1/20

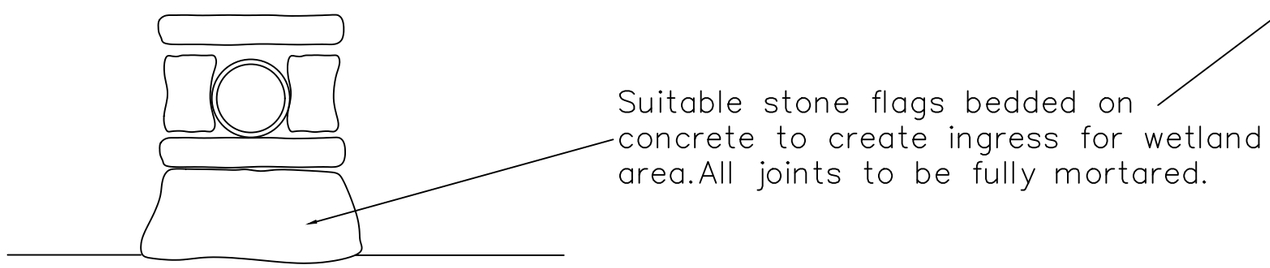

OUTFALL SECTION FOR WETLAND INGRESS SCALE 1/20

Borough of Pendle	PROJECT: LOMESHAYE INDUSTRIAL ESTATE BRIDLEWAY CONSTRUCTION	TITLE: PROPOSED DRAINAGE DETAILS	DRAWN BY: J D Austin	CHECKED: S Whalley	DATE: JUNE 2021
			FILE REF: XXXX	SCALE: 1/20 at A3	DRAWING NUMBER: E0746 D04A