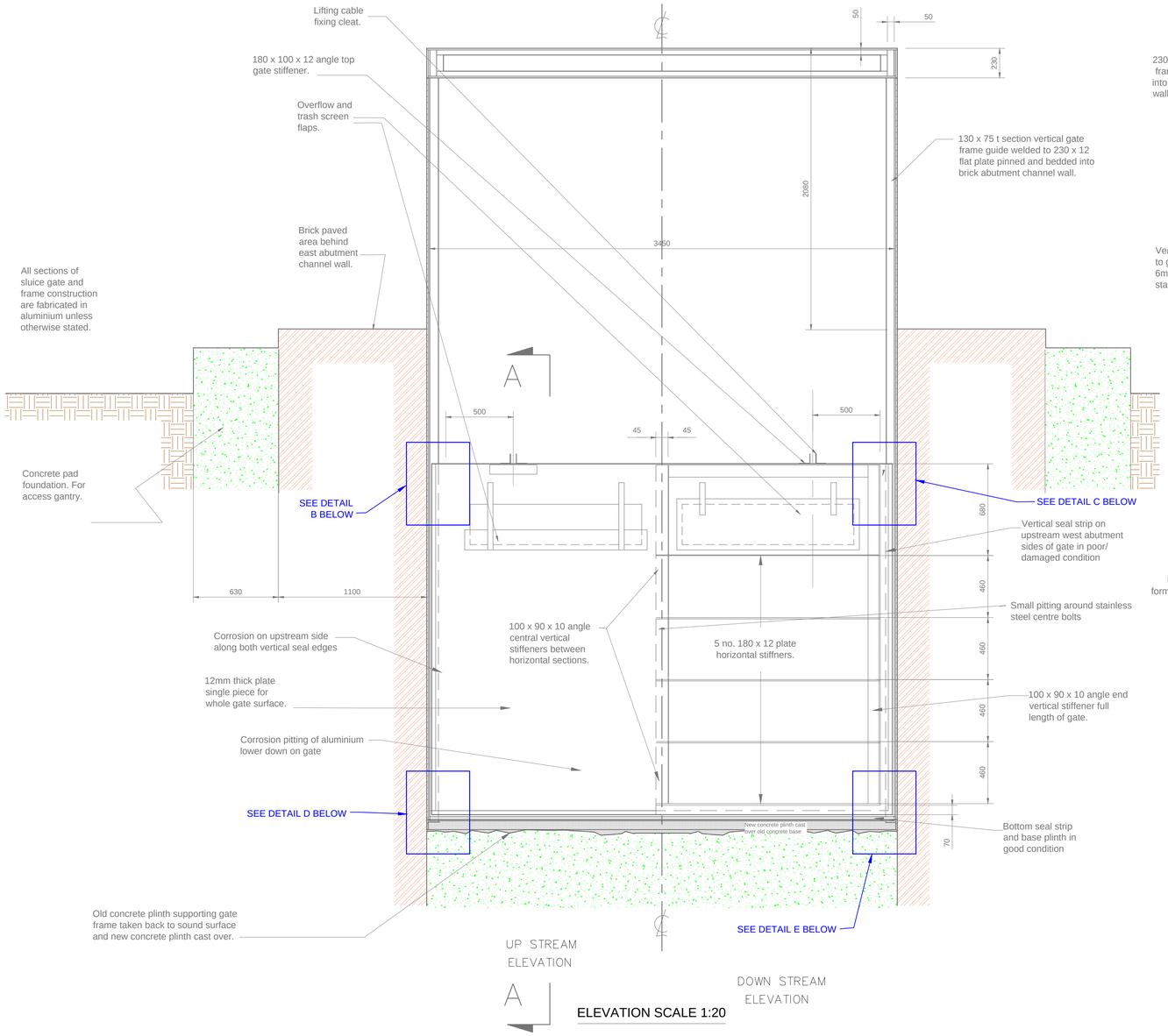

ELEVATION SCALE 1:20

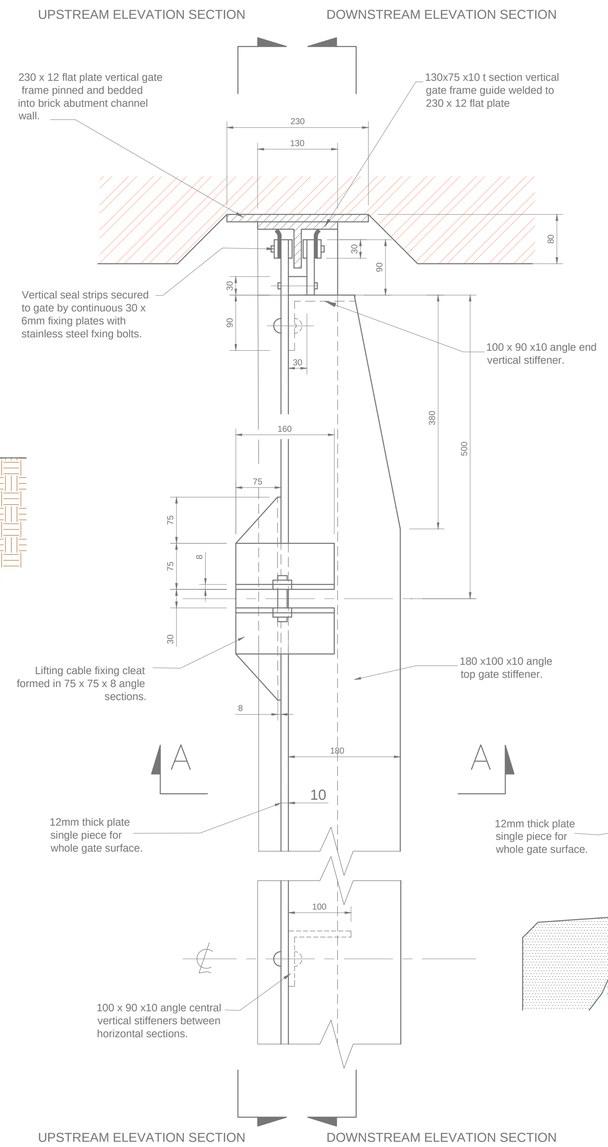

PLAN DETAIL OF SLUICE GATE CONSTRUCTION SCALE 1:5

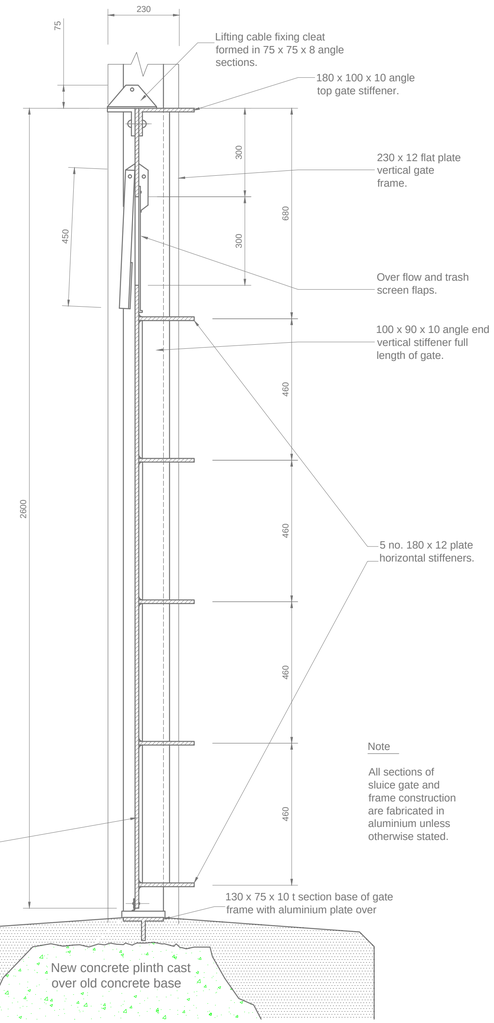

SECTION A-A OF SLUICE GATE

SCALE 1:10

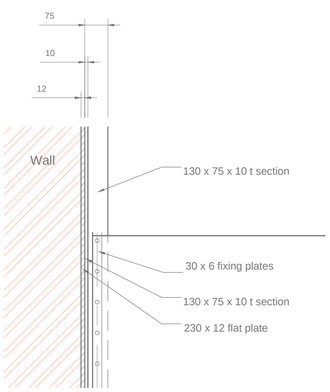

SLUICE GATE DETAIL B

SCALE 1:10

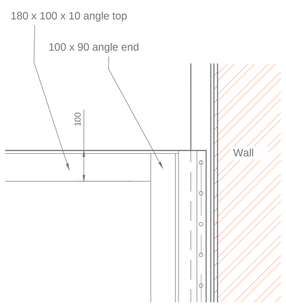

SLUICE GATE DETAIL C

SCALE 1:10

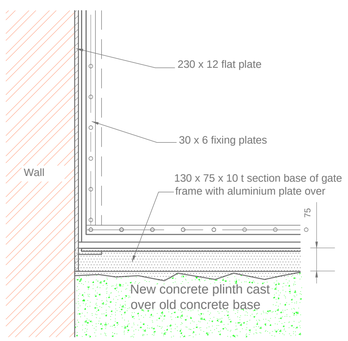

SLUICE GATE DETAIL D

SCALE 1:10

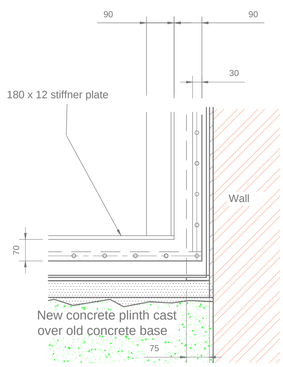

SLUICE GATE DETAIL E

SCALE 1:10

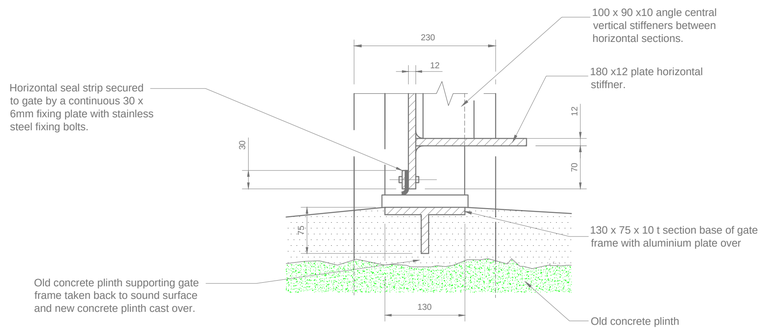

SECTIONAL DETAIL OF SLUICE GATE BASE CONSTRUCTION SCALE 1:5

Revisions	No.	Drawn	Date

Borough of Poole

Transportation Services
J.C.RICE BSC (Hons), C.Eng, MICE
Engineering Manager

SCHEME

HIGHWAY STRUCTURES UNDERWATER SURVEYS

TITLE

BOATING LAKE FOOTBRIDGE
STRUCTURE No 138
SLUICE GATE STRUCTURE

DATE	DRAWN	CHECKED
JUL 2016	JC	

SCALES	SIZE	SECTION
AS SHOWN	A1	ENG

DRAWING NUMBER

SCHEME	DRAWING	VARIANT
JS2600	138/04	